# CC43100,1,2,3,5,6,7,8VOKB30
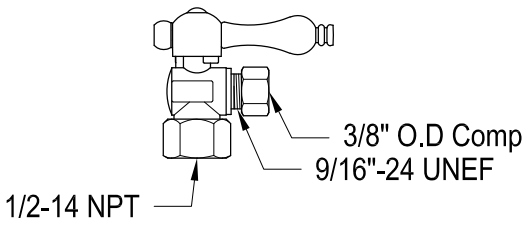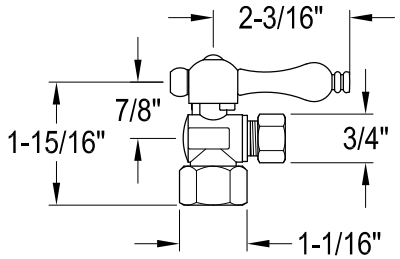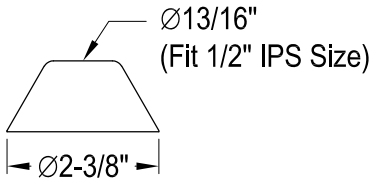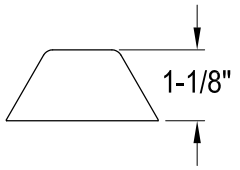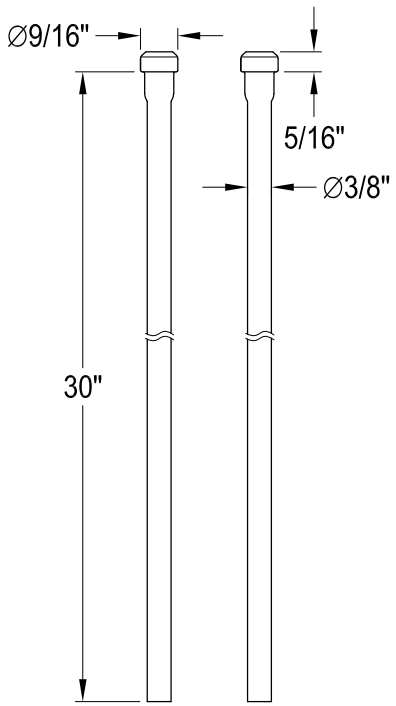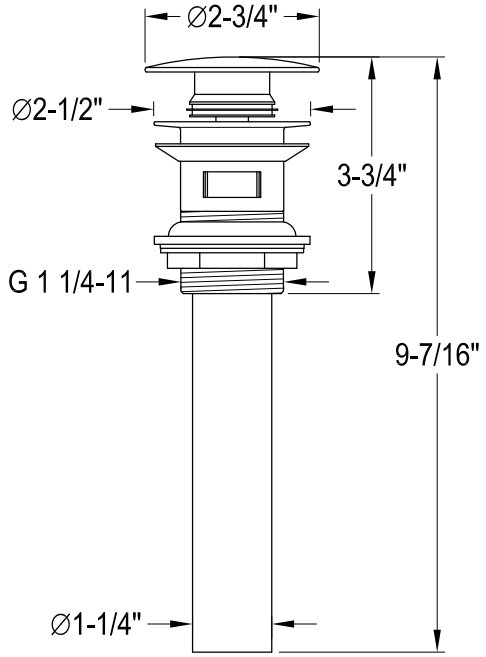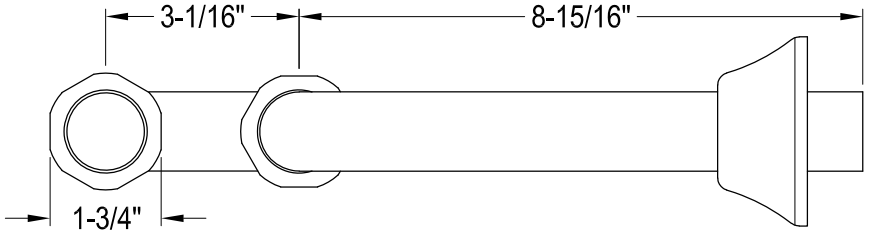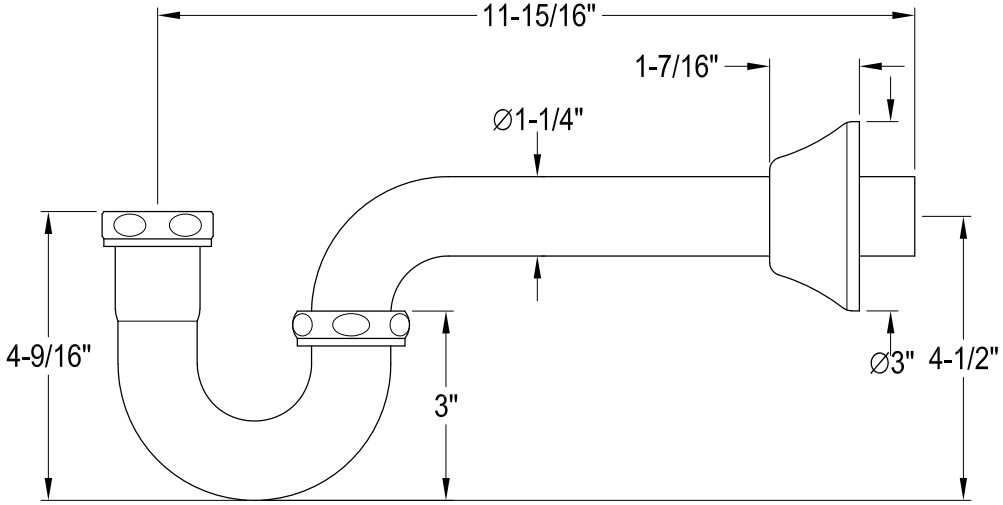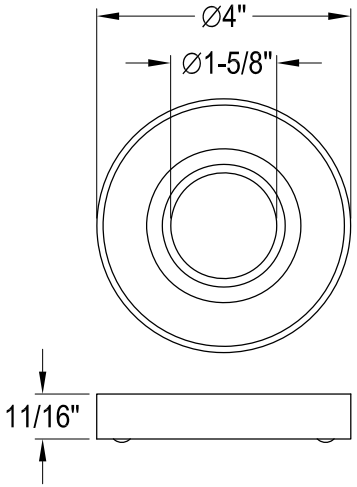
Plumbing Sink Trim KIT With P-Trap & Drain