CC43200,1,2,5,7,8
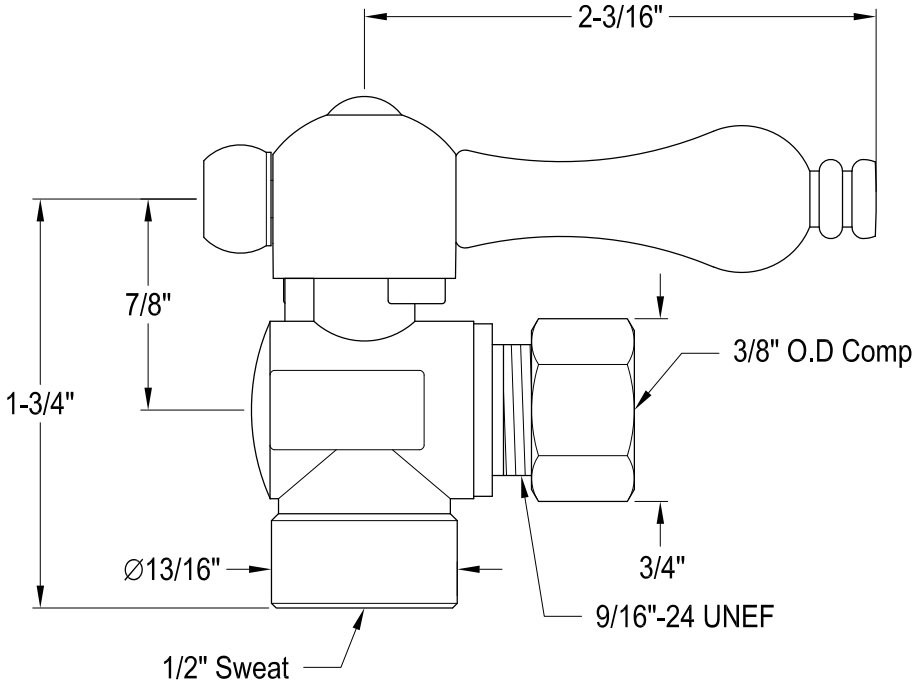
Quarter Turn Valves, 1/2" Sweat x 3/8" O.D Comp