CC44101,2,5,8X
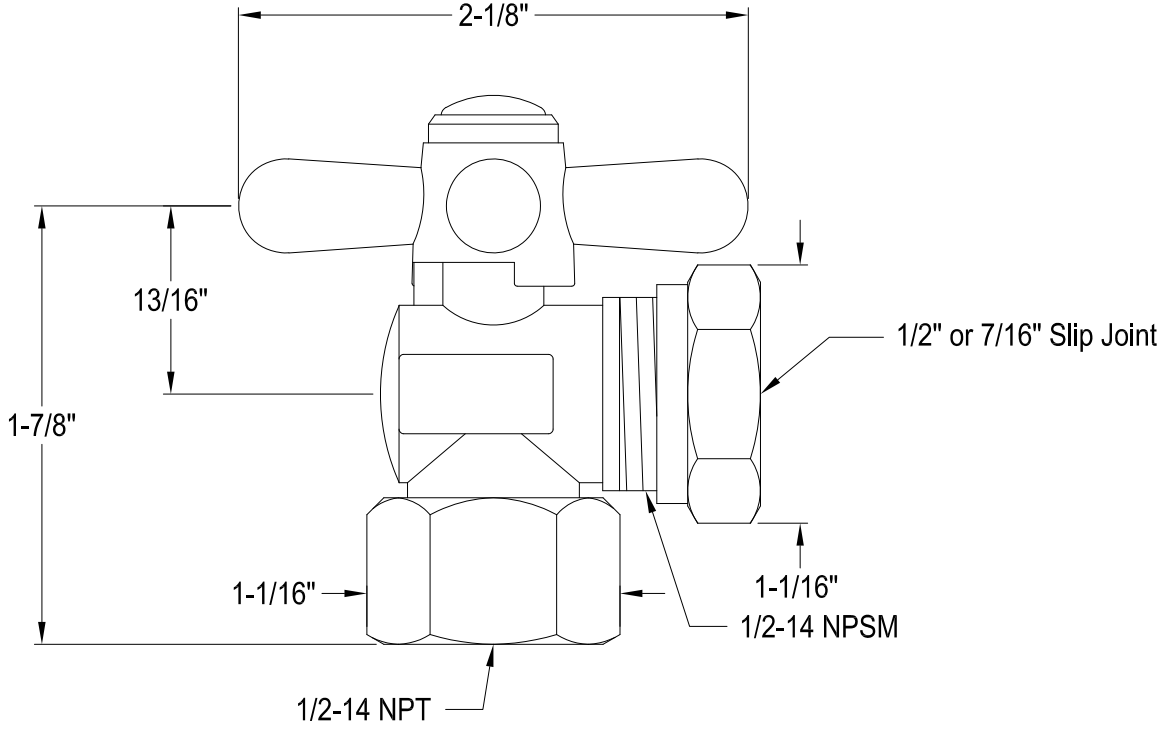
Quarter Turn Valves, 1/2" FIP x 1/2" or 7/16" Slip Joint