CK132C1,2,5,8
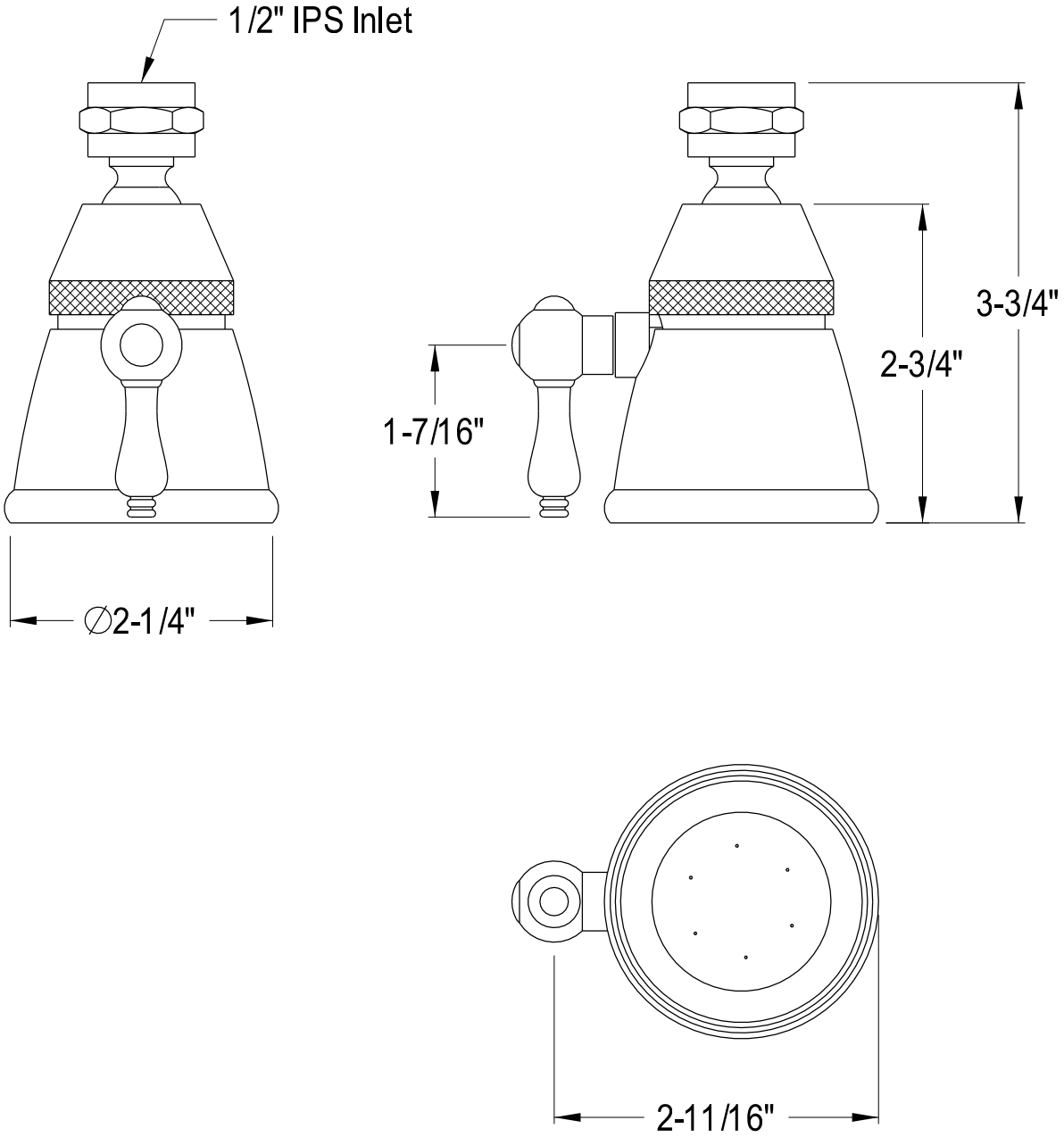
2-1/4" Diameter Adjustable Brass Showerhead