KINGSTON

TO ORDER PARTS, CALL: 1-877-252-7277
www.kingstonbrass.com

FSC8950,1,3,5,8,9CKL,CKLAB

Widespread Lavatory Faucet with Brass Pop-Up

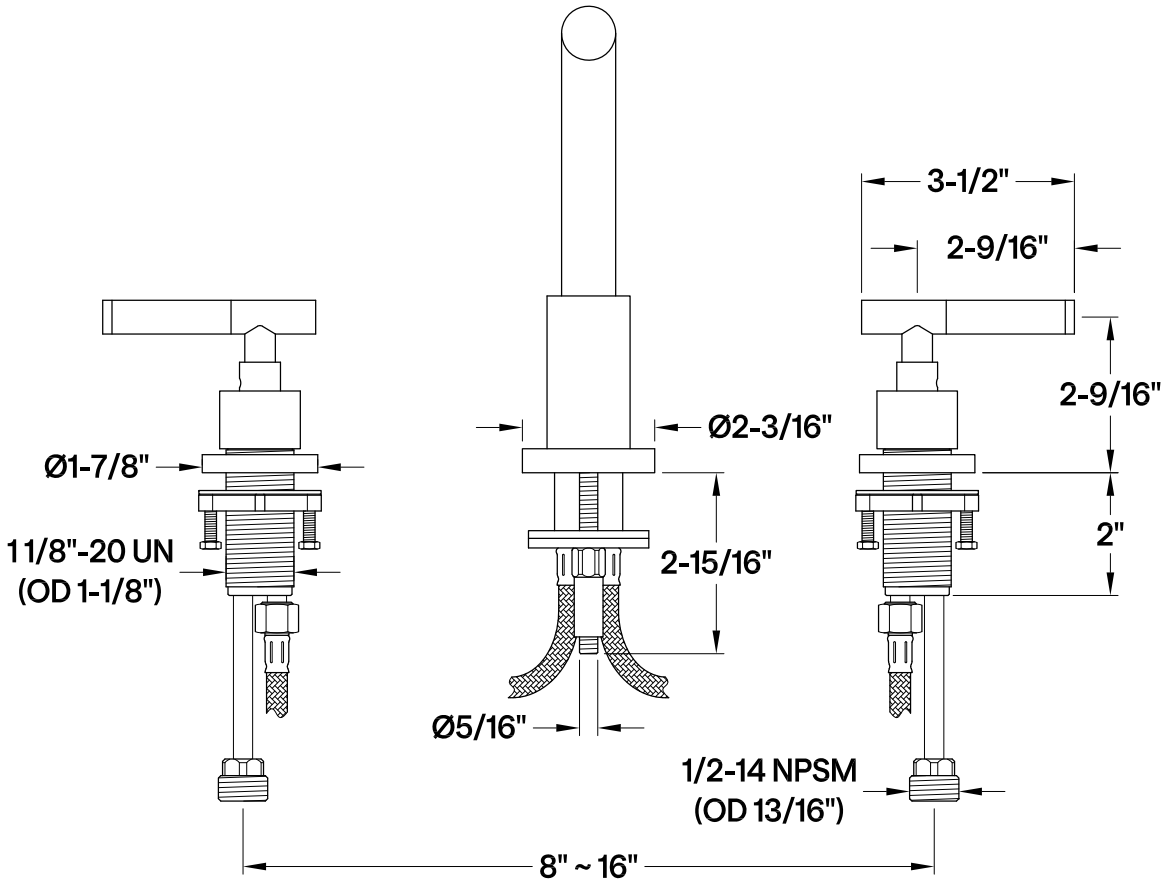

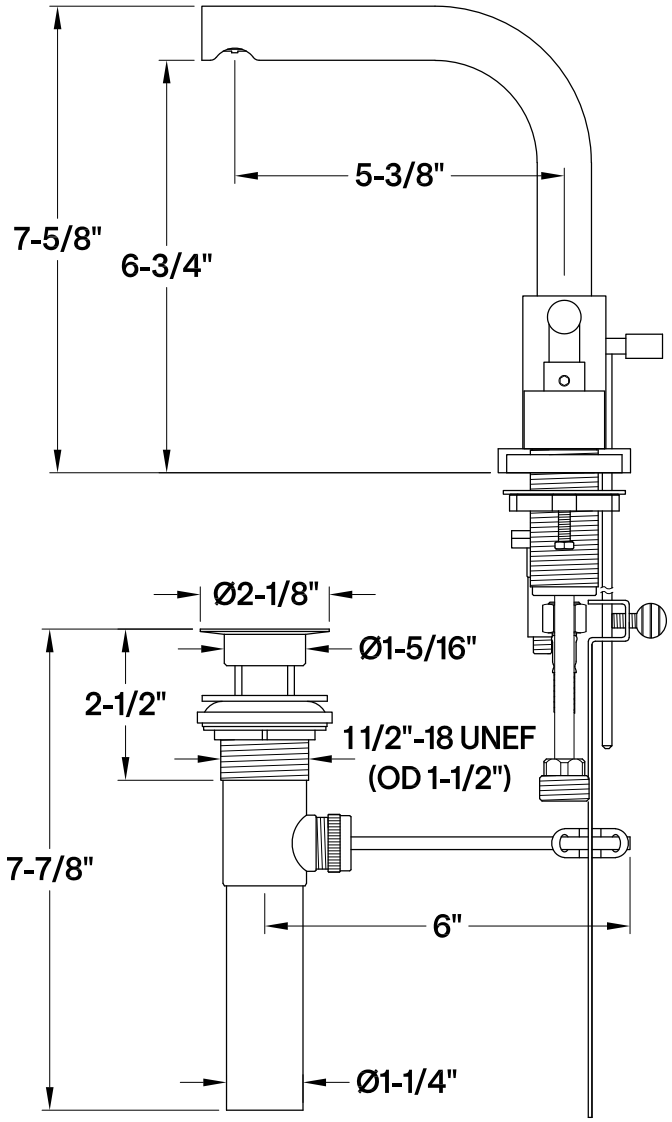

2026-01-A