FSCH1970,1,2,3,4,5,6,8,9,33ACLC,ACLACC
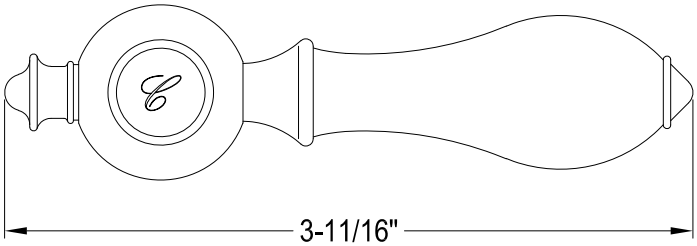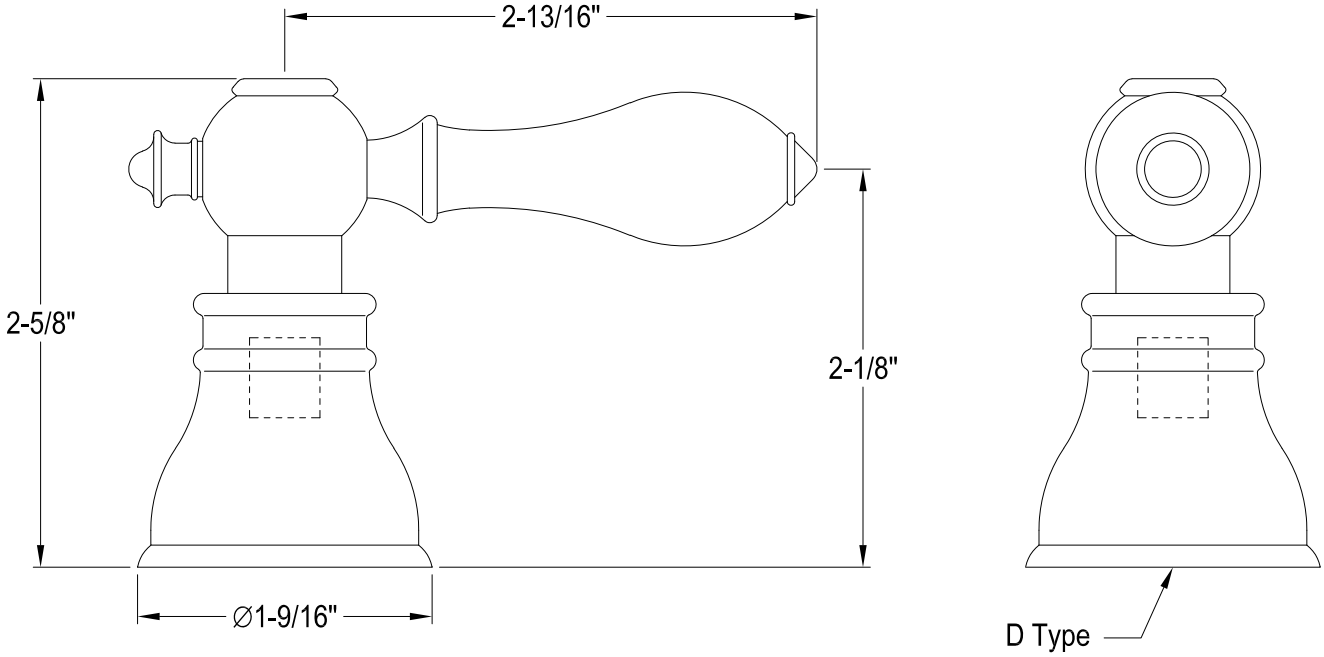
Lever Handle, Cold