FSCH8920,1,3,5,8,9CKL
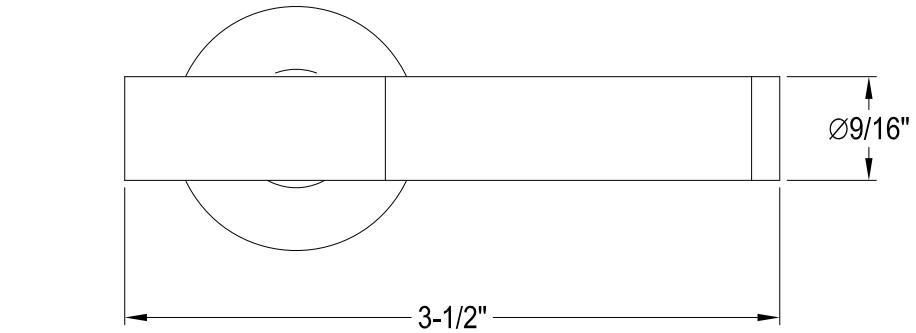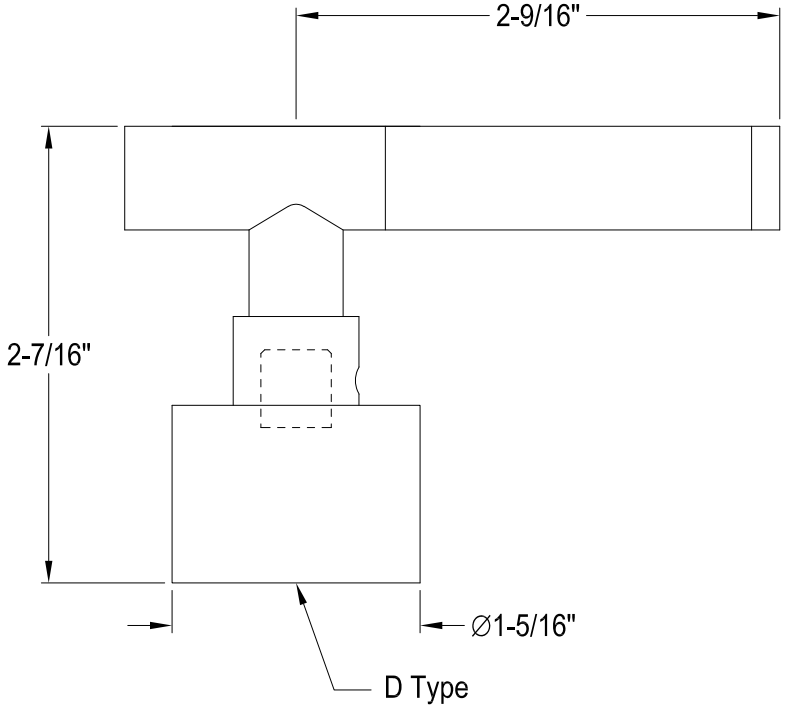
Lever Handle