GKB111,SN
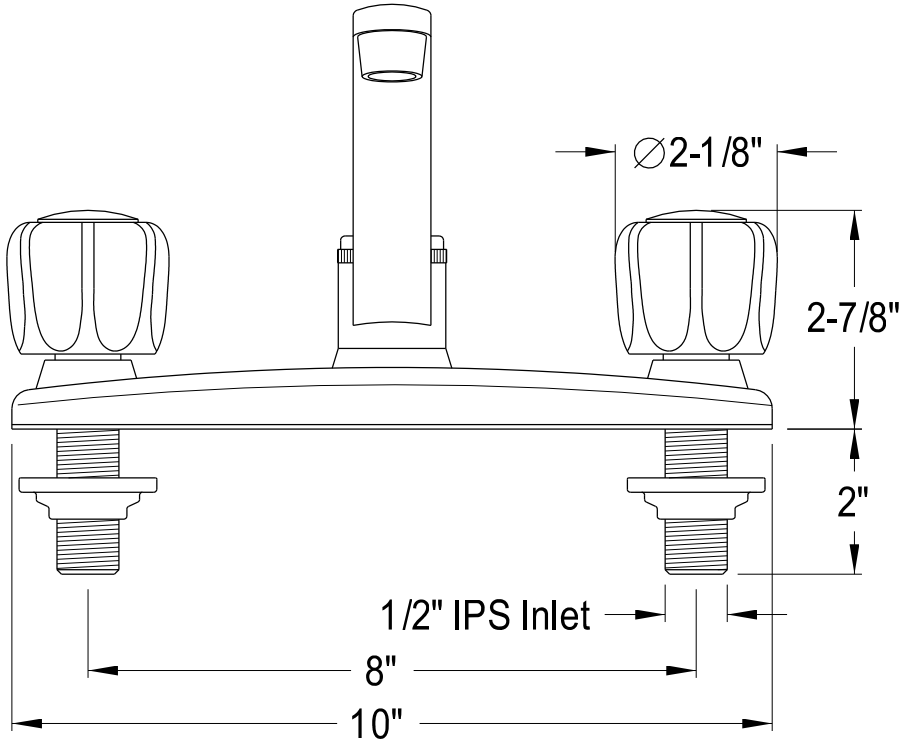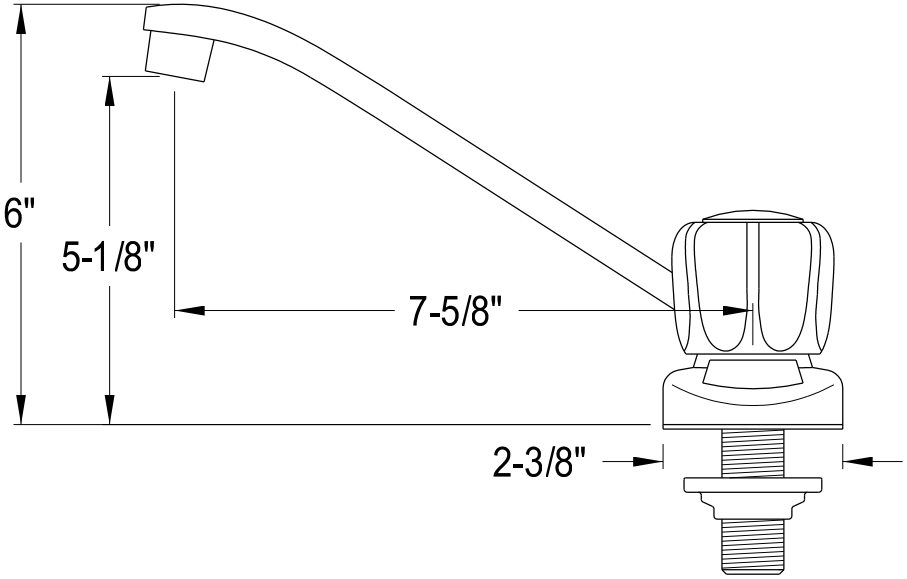
Twin Handles 8" Centerset Kitchen Faucet