GKB632,4,5,7,8,9SO
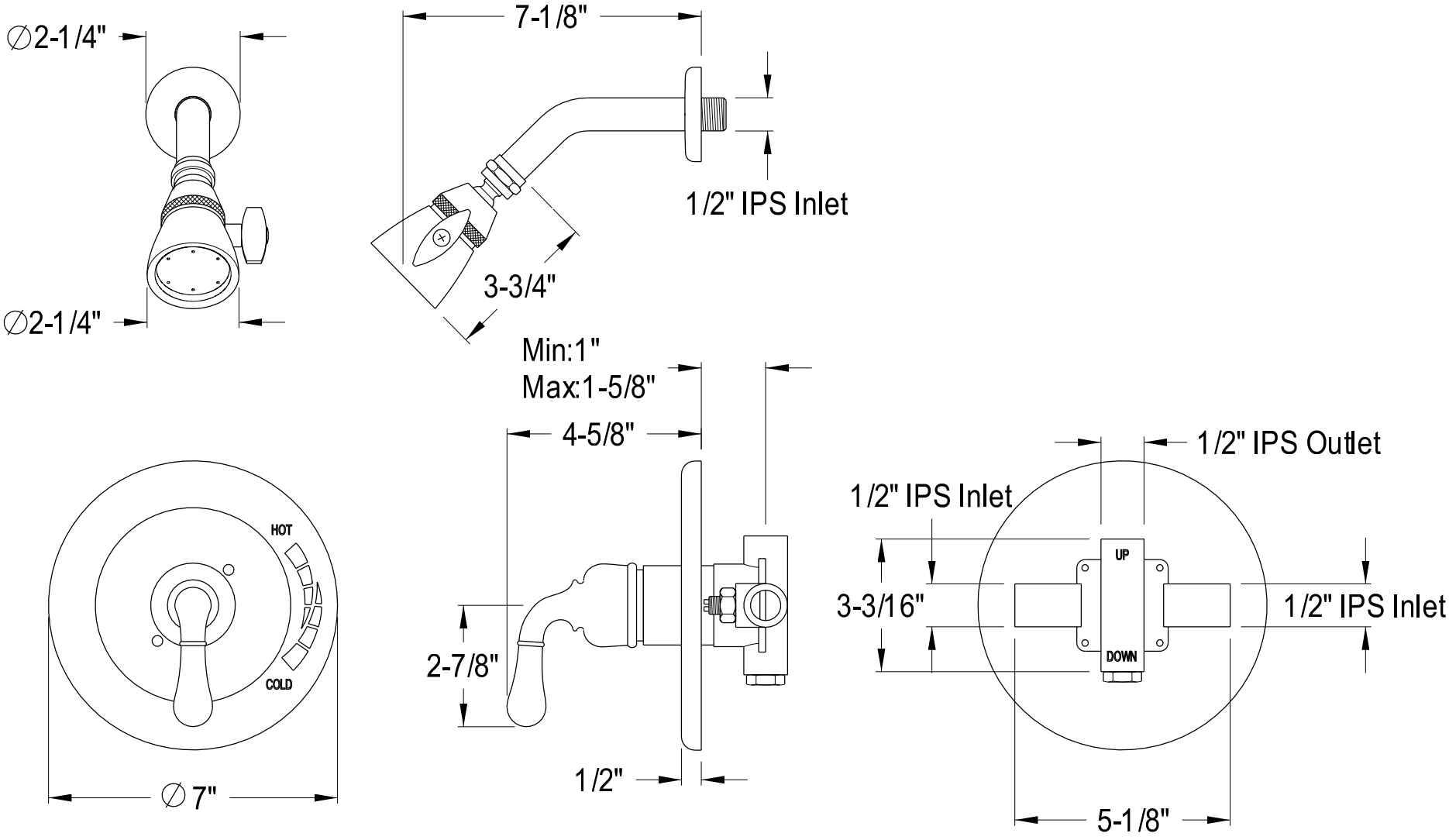
Single Handle Pressure Balanced Tub & Shower Faucet, Shower Only