GKUDF33209

Stainless Steel Farmhouse Double Bowl Kitchen Sink, (L)33" X (W)20" X (D)9-5/16"

	Depth	SS Type	Thickness
Sink Body	9-5/16"	18-10 304 Grade	1.05mm(18G)
Front Apron	9"	18-10 304 Grade	1.05mm(18G)

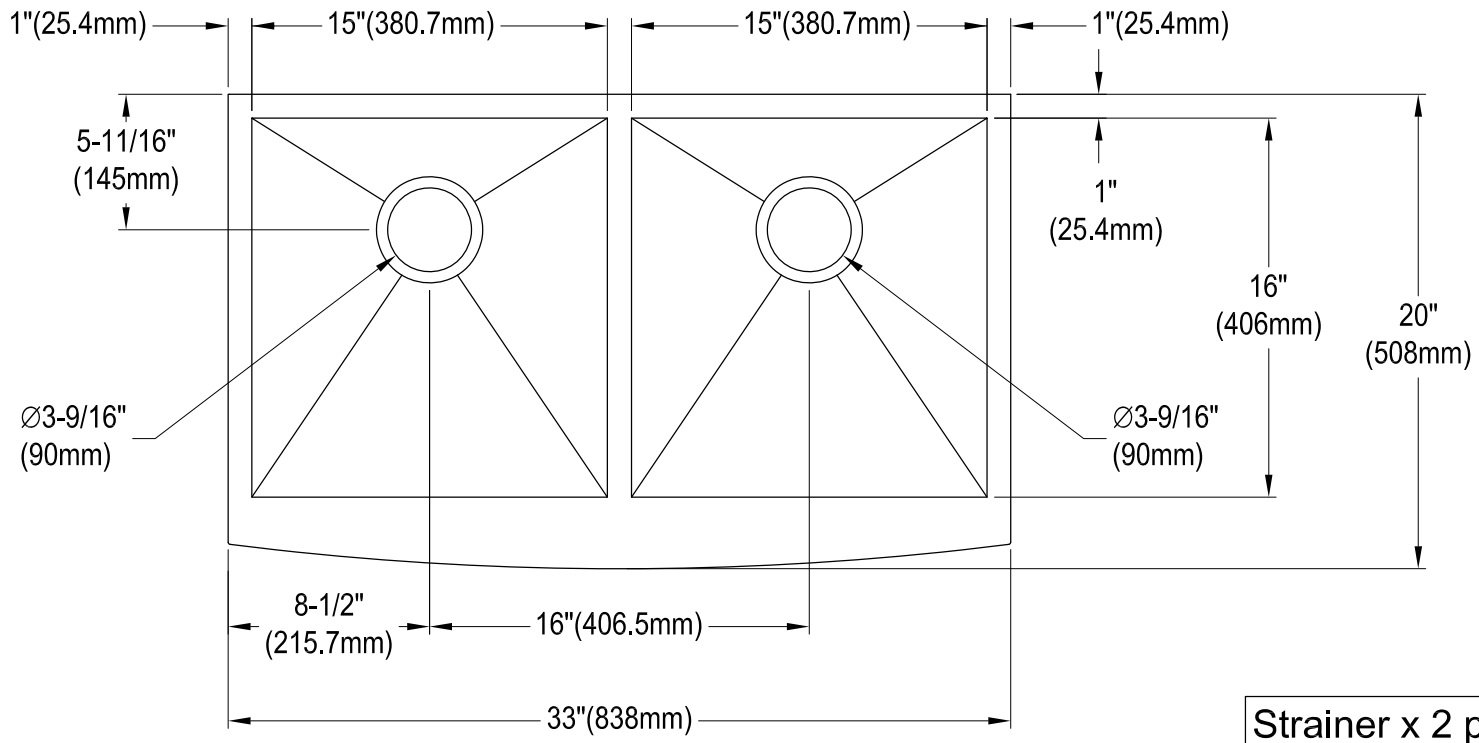

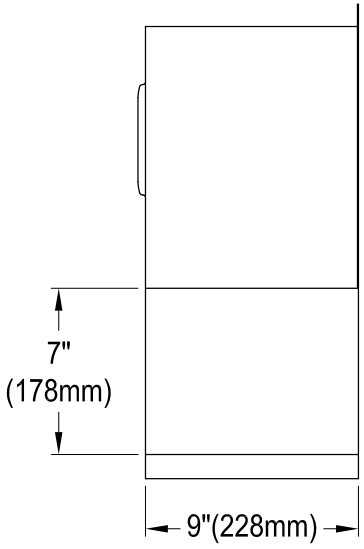

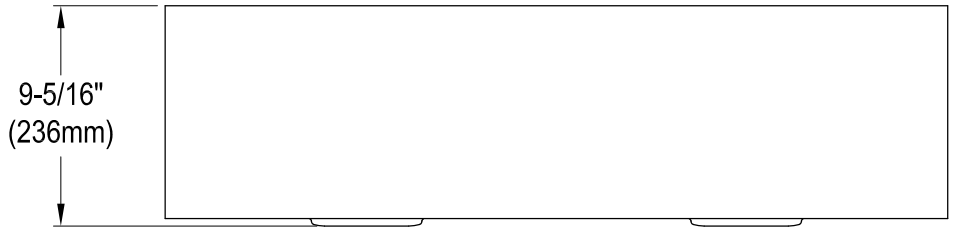
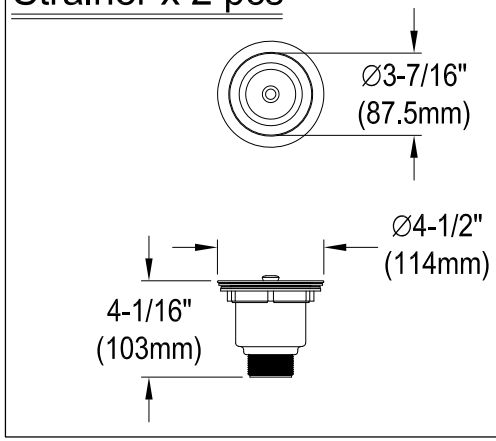
Strainer x 2 pcs