GSY7700,1,3,4,5,6,8ACLSP
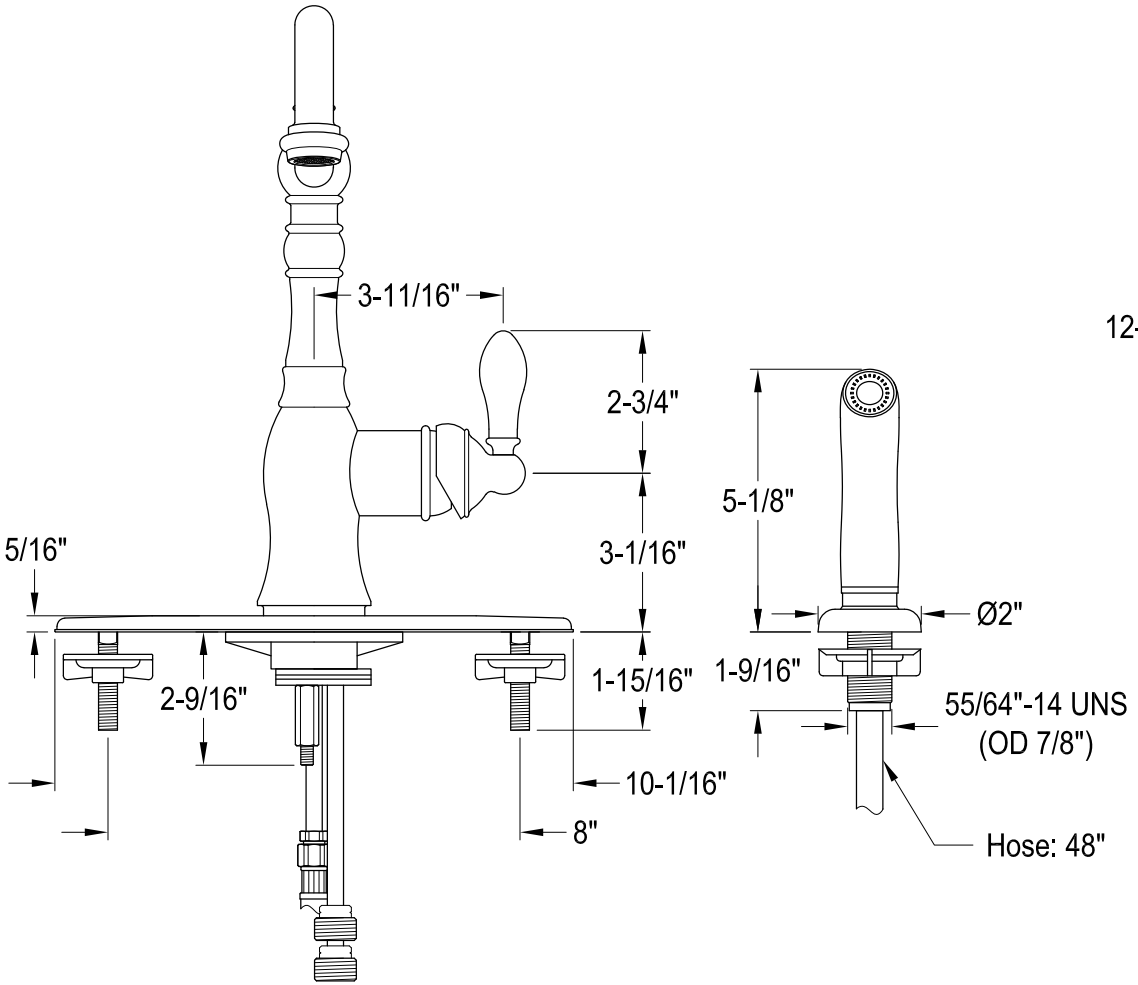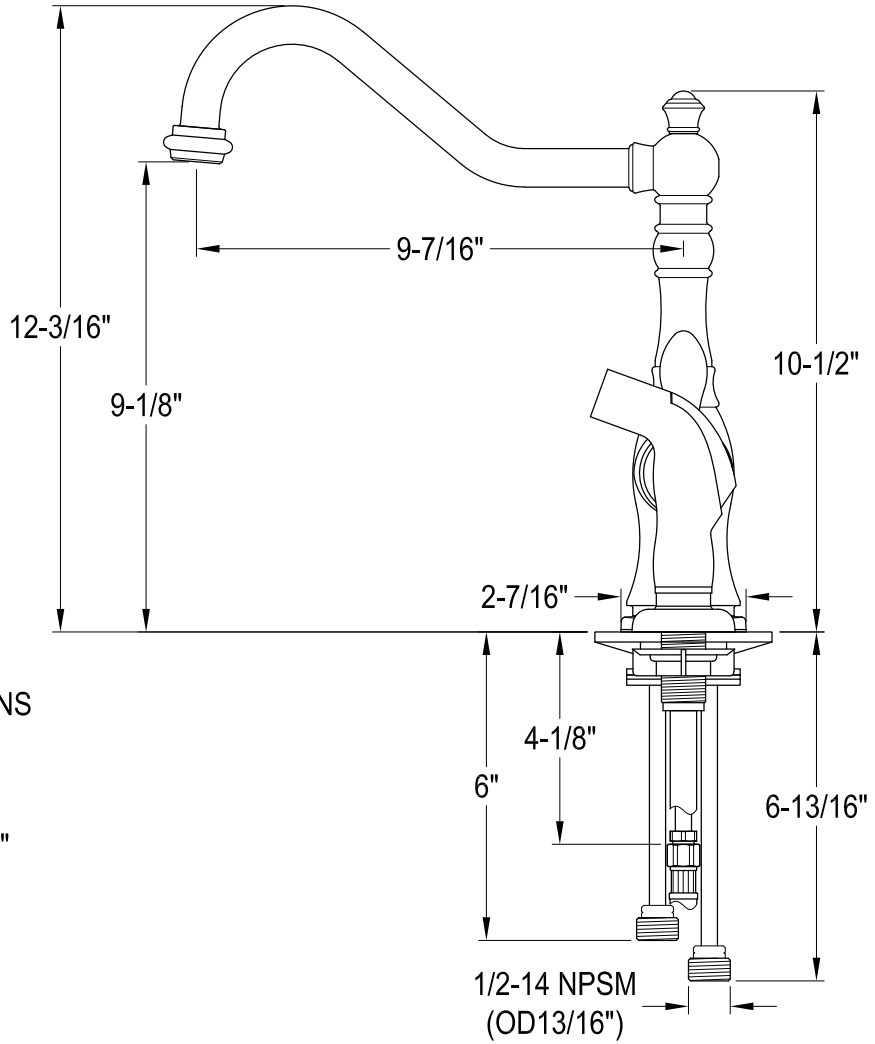
Single Handle Deck Mount Kitchen Faucet with Sprayer