KAK2520,1,2,7,8D
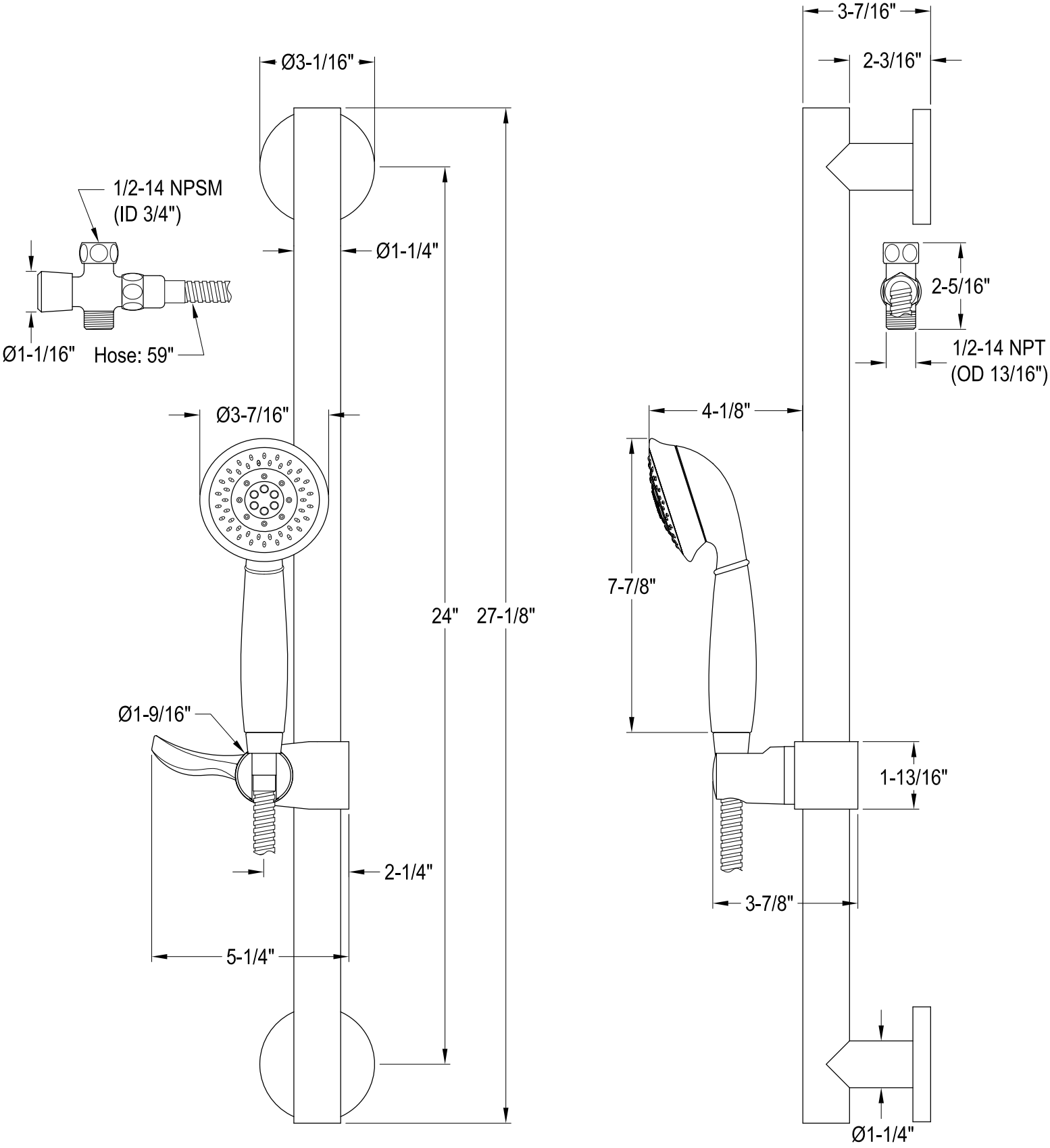
Slide Bar Combo with Hand Shower