KB161,2,8B
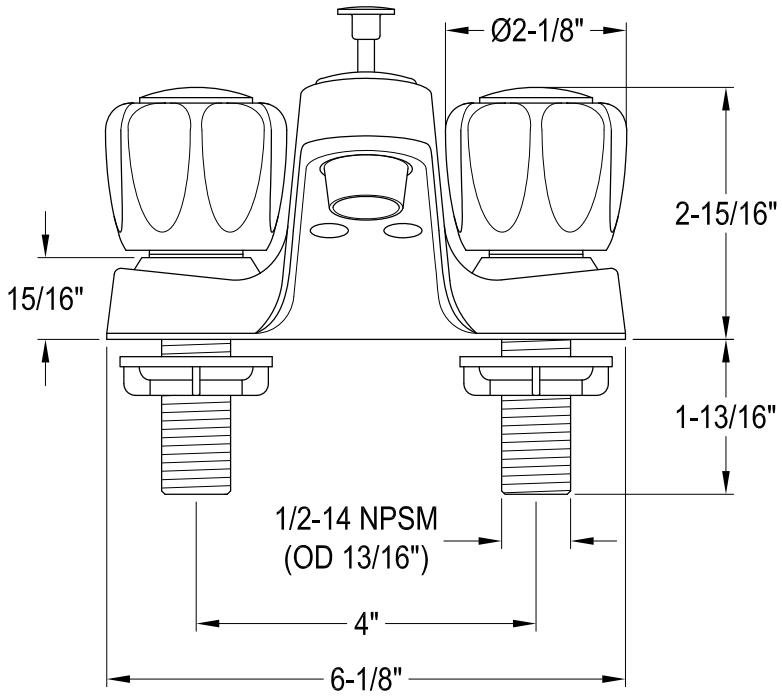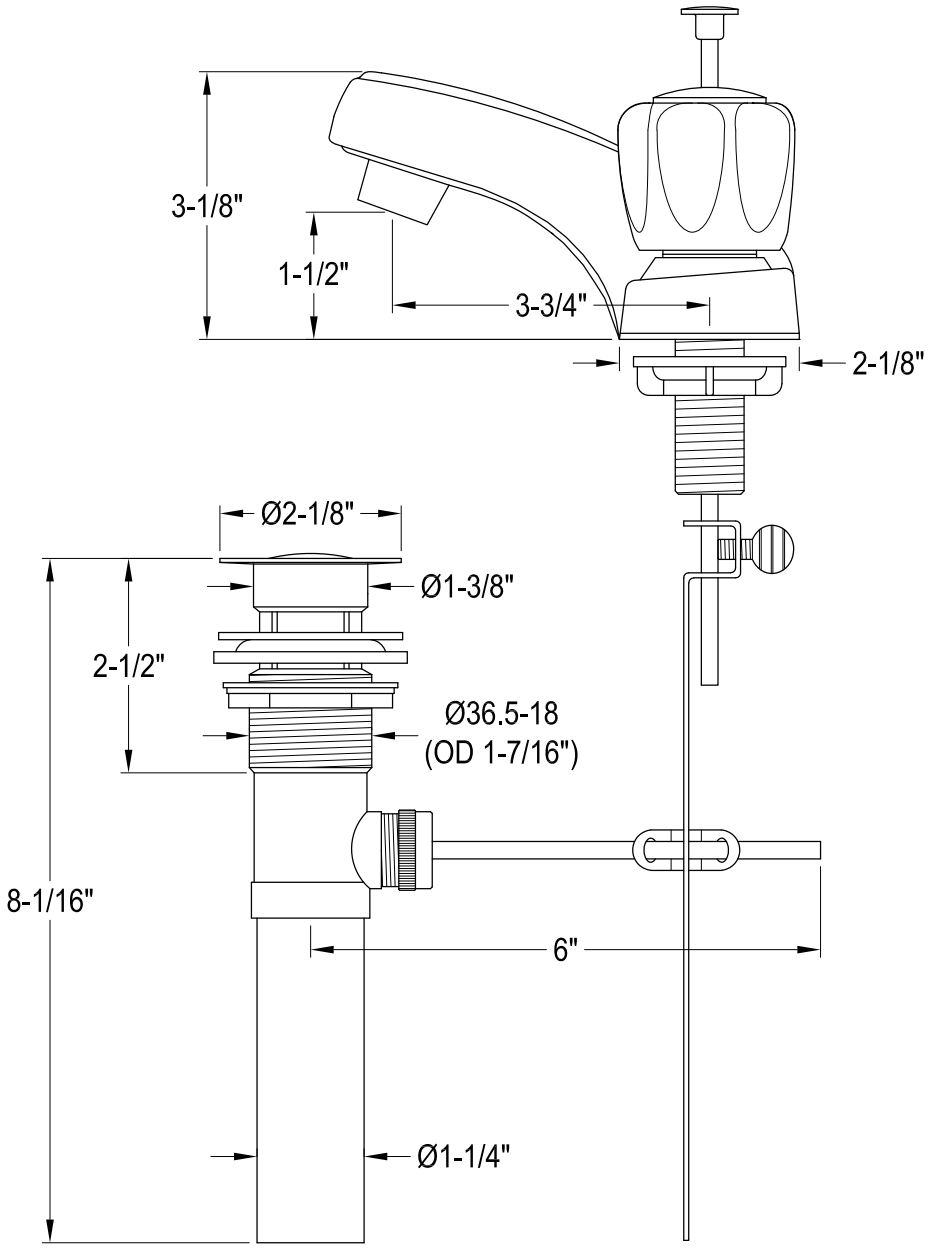
Twin Handles 4" Centerset Lavatory Faucet with Brass Pop-Up