KINGSTON

TO ORDER PARTS, CALL: 1-877-252-7277
www.kingstonbrass.com

KB3630,1,2,3,5,6,7,8ACLE

Single Handle Pressure Balanced Tub & Shower Faucet, Valve Trim Only

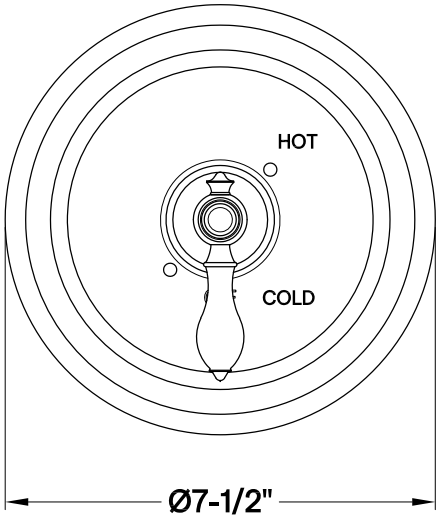

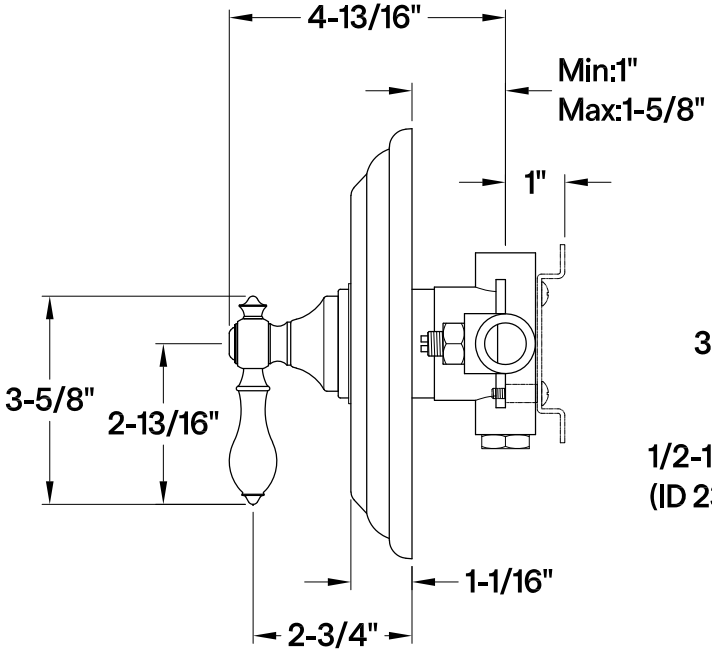

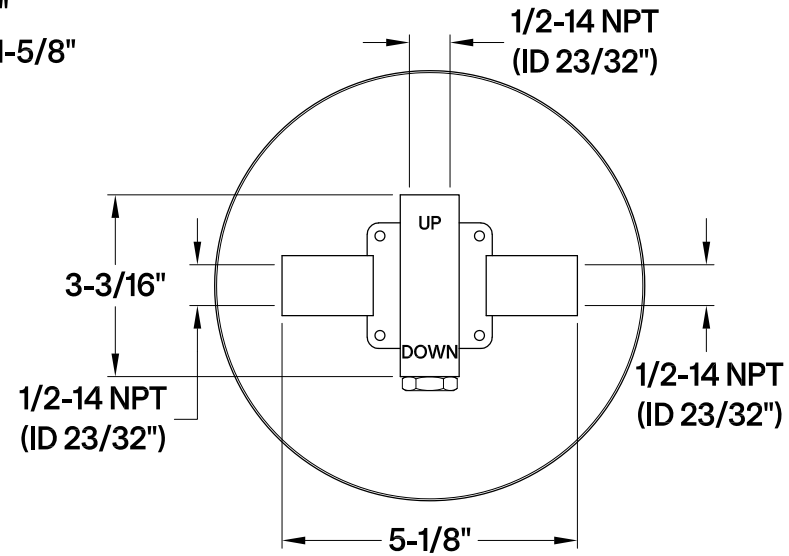

Bracket

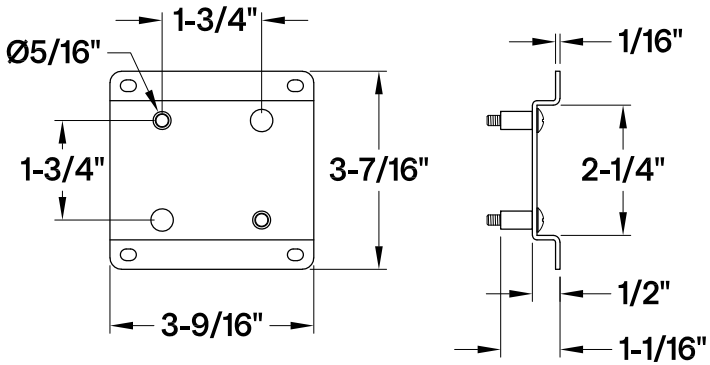

2025-12-A