KB3630,1,2,3,5,6,7,8AX
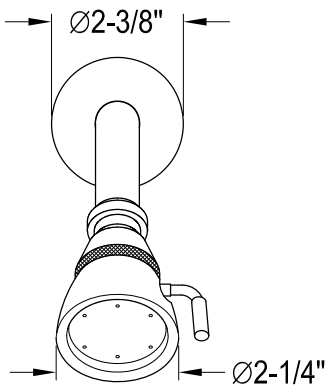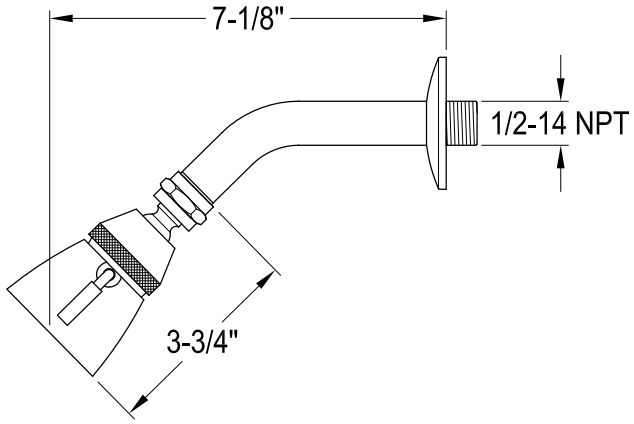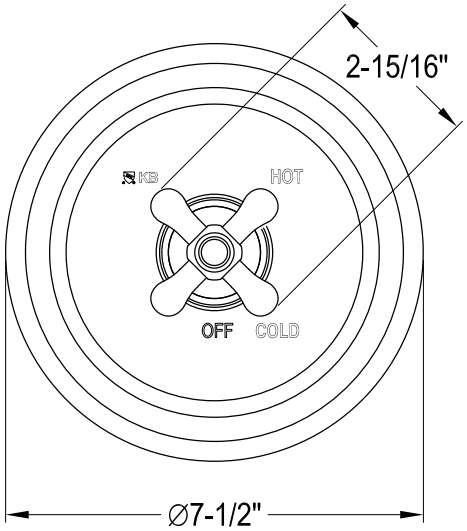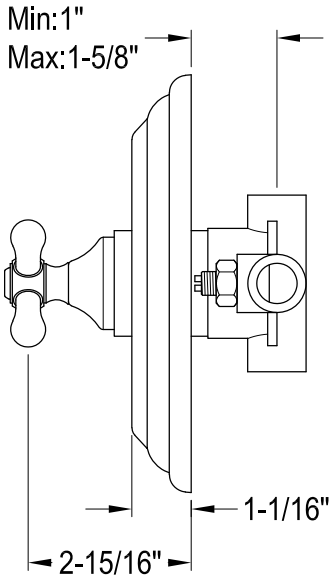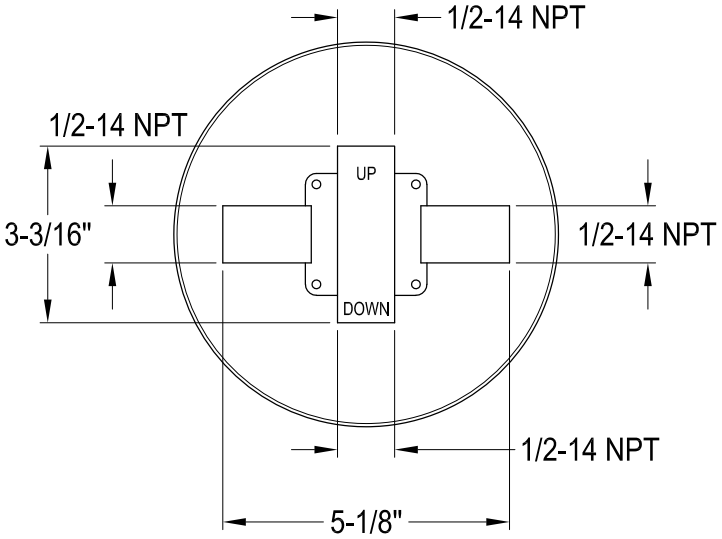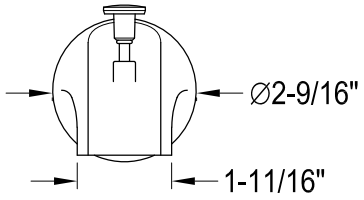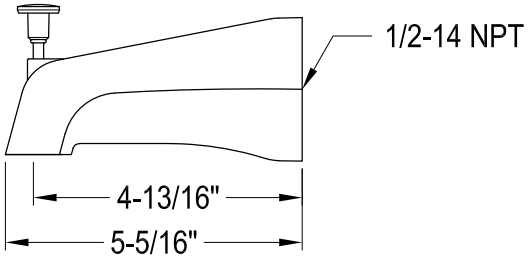
Single Handle Pressure Balanced Tub & Shower Faucet