KINGSTON

TO ORDER PARTS, CALL: 1-877-252-7277
www.kingstonbrass.com

KB6330,1,6,7,8DQL

Single Handle Pressure Balanced Tub & Shower Faucet

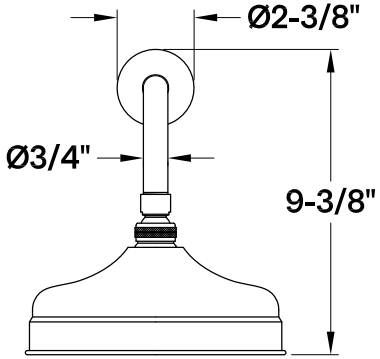

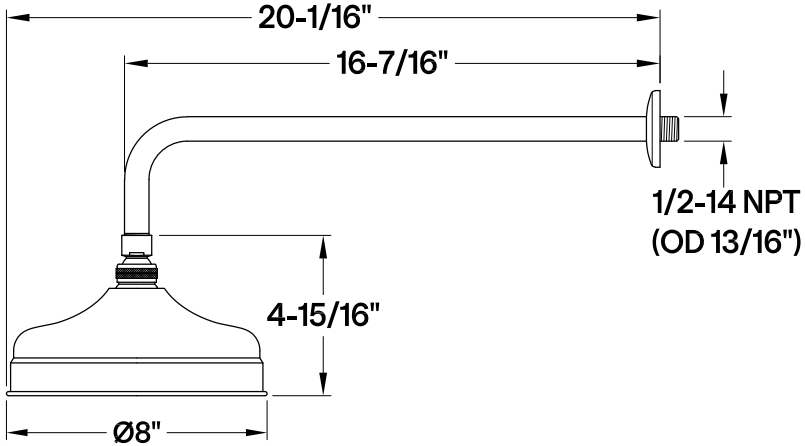

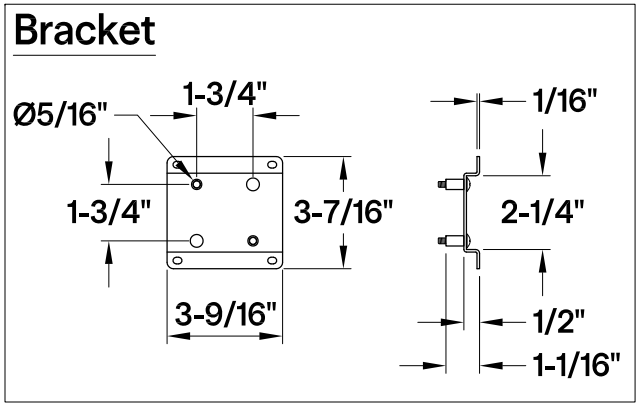

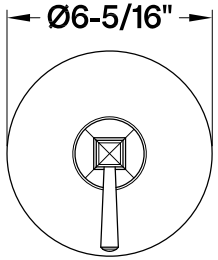

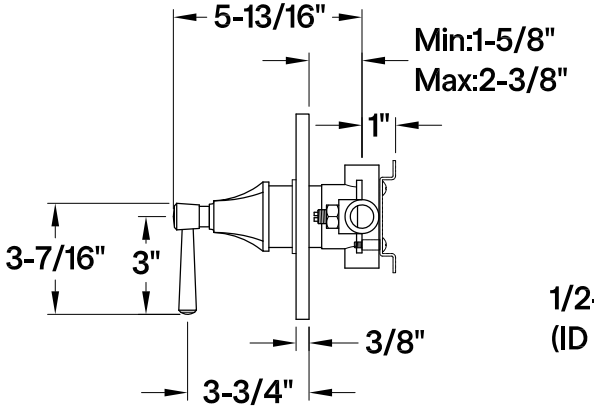

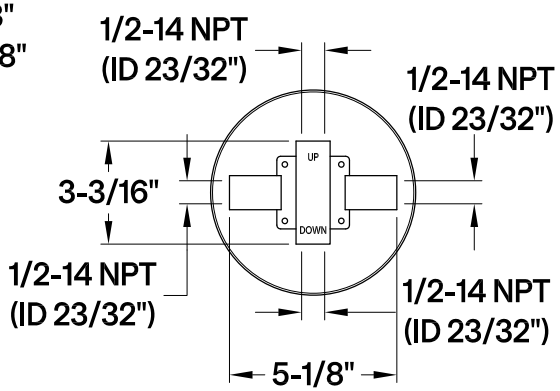

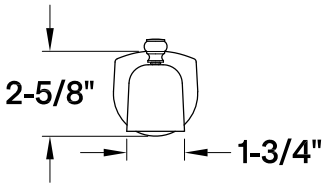

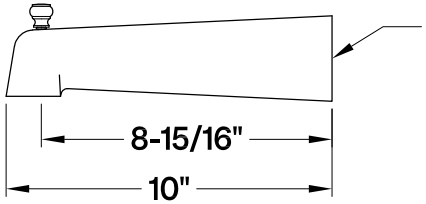

2026-06-B