KINGSTON

TO ORDER PARTS, CALL: 1-877-252-7277
www.kingstonbrass.com

KB6330,1,2,3,6,7,8DX

Single Handle Pressure Balanced Tub & Shower Faucet

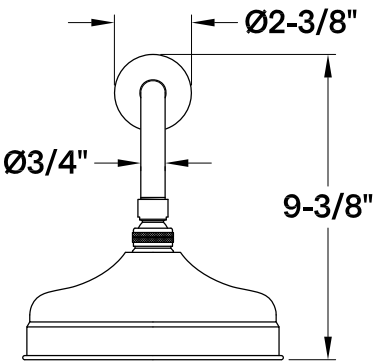

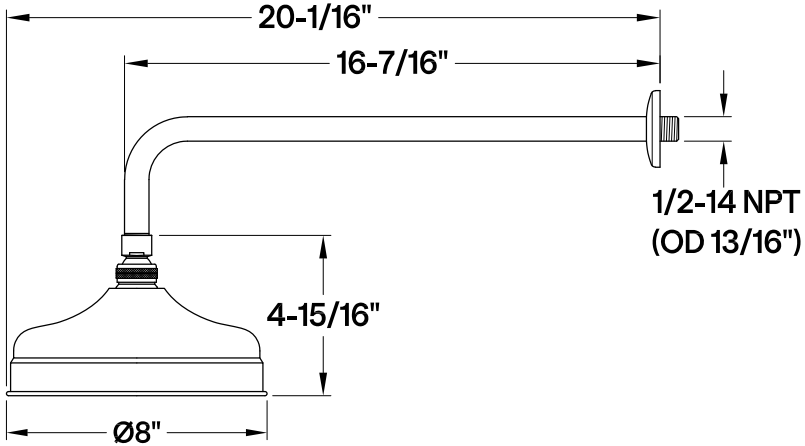

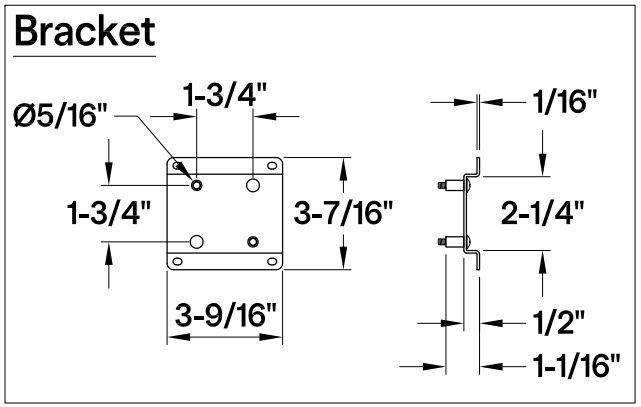

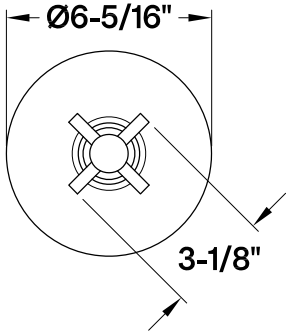

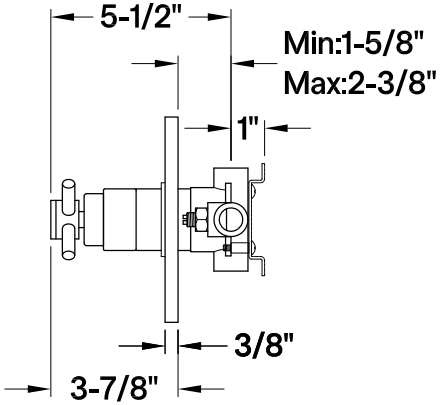

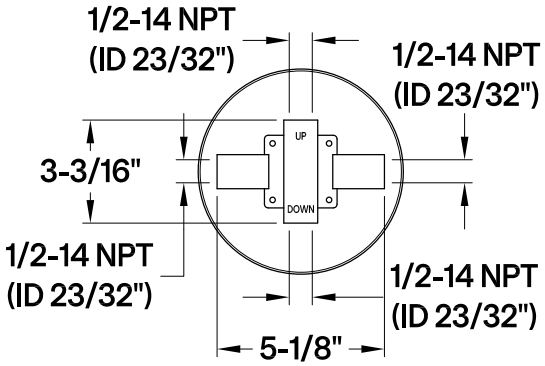

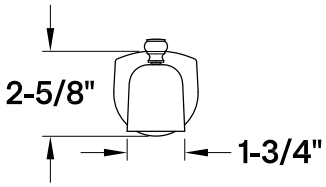

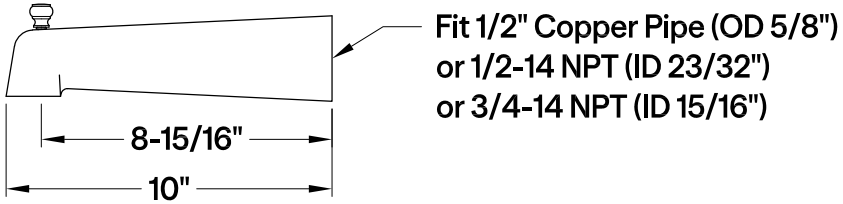

2026-03-B