KB6340,1,2,3,6,7,8CML
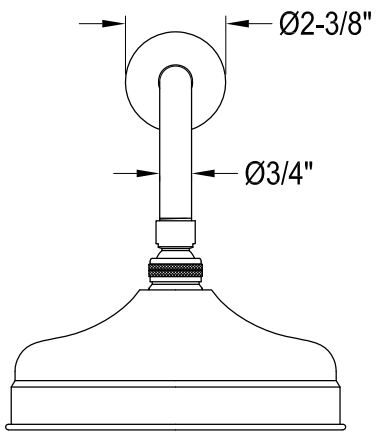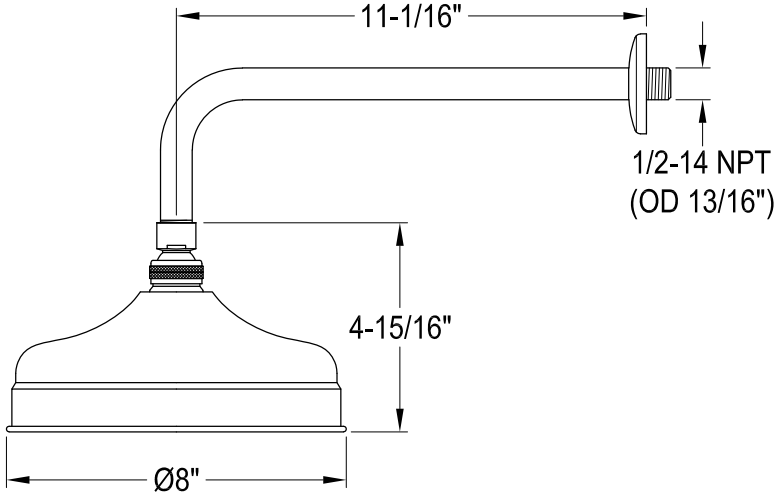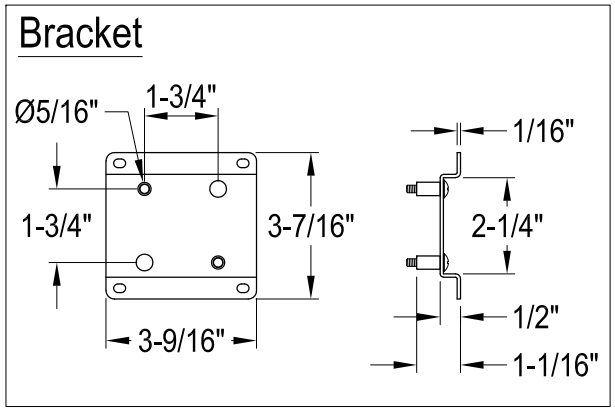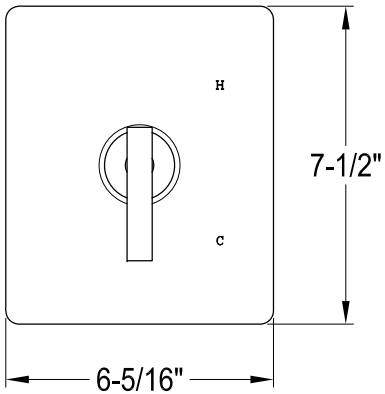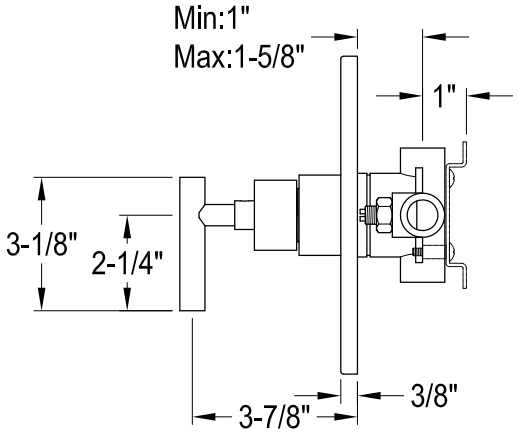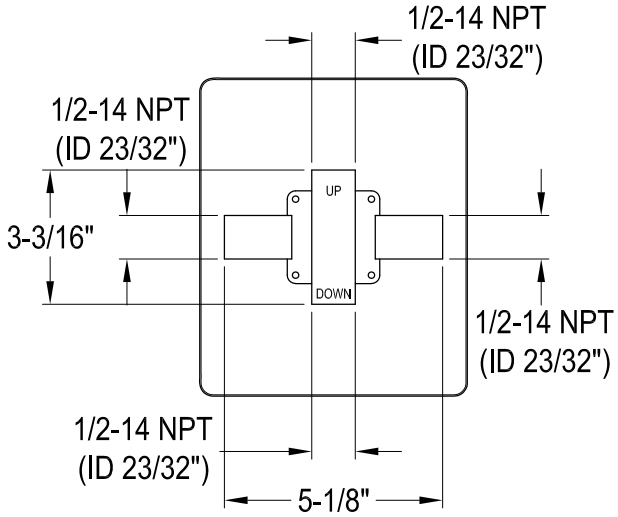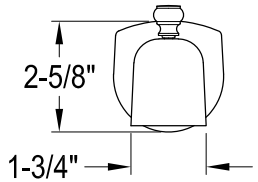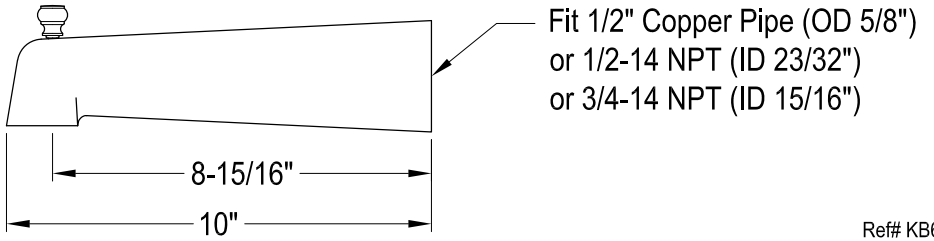
Single Handle Pressure Balanced Tub & Shower Faucet