KB8981,2,5,8NDL
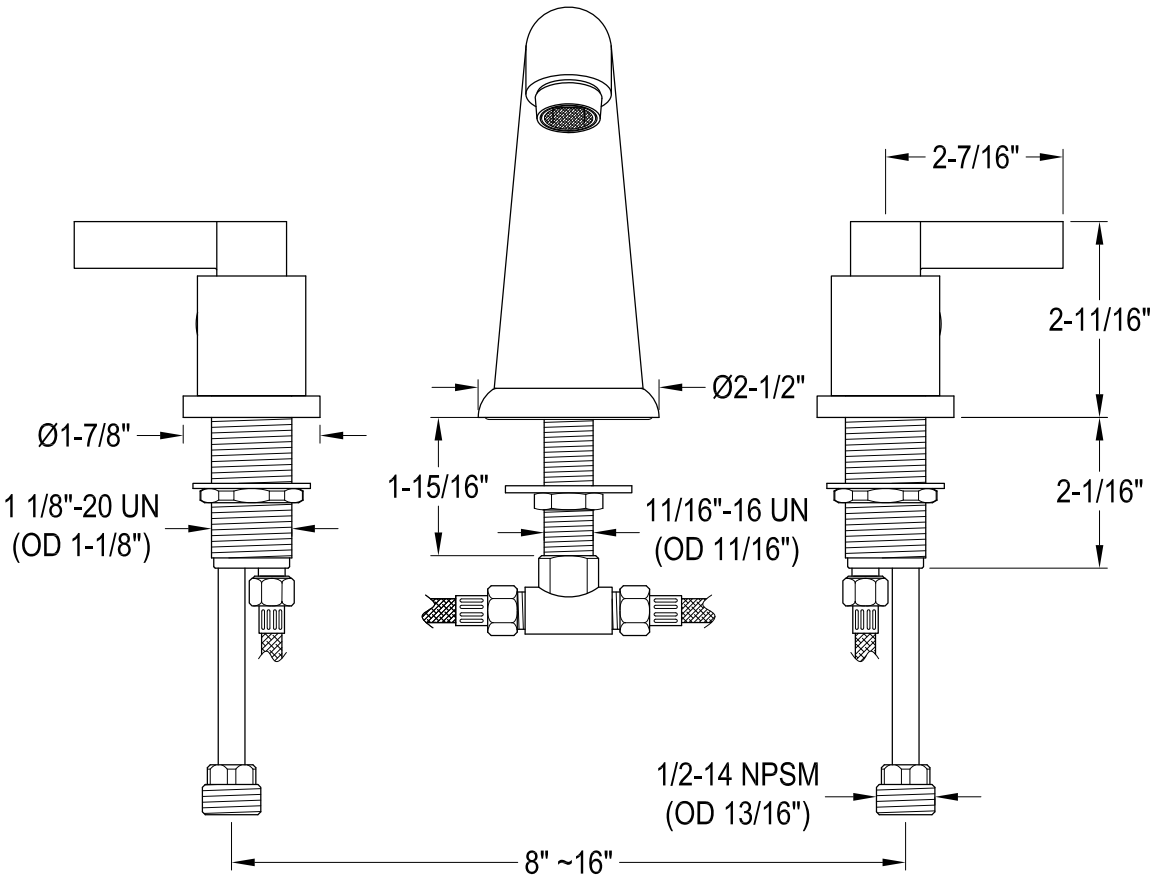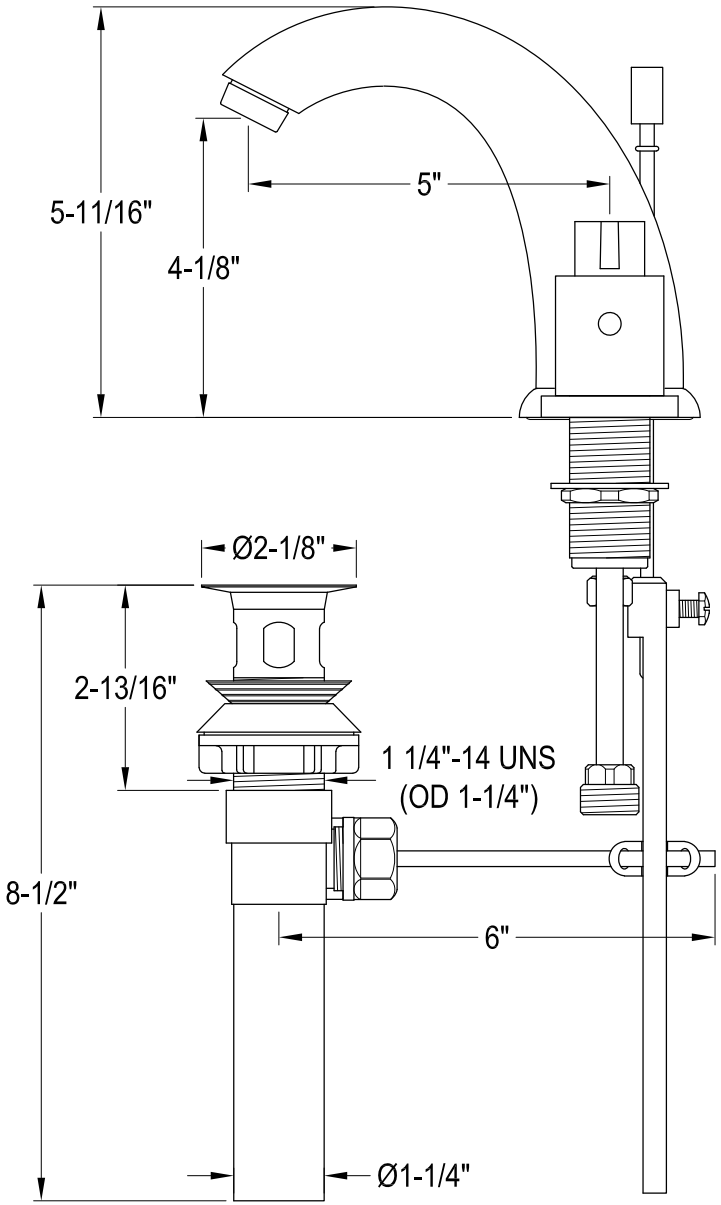
Widespread Lavatory Faucet with Retail Pop-Up