# KBE36310,20,50,80
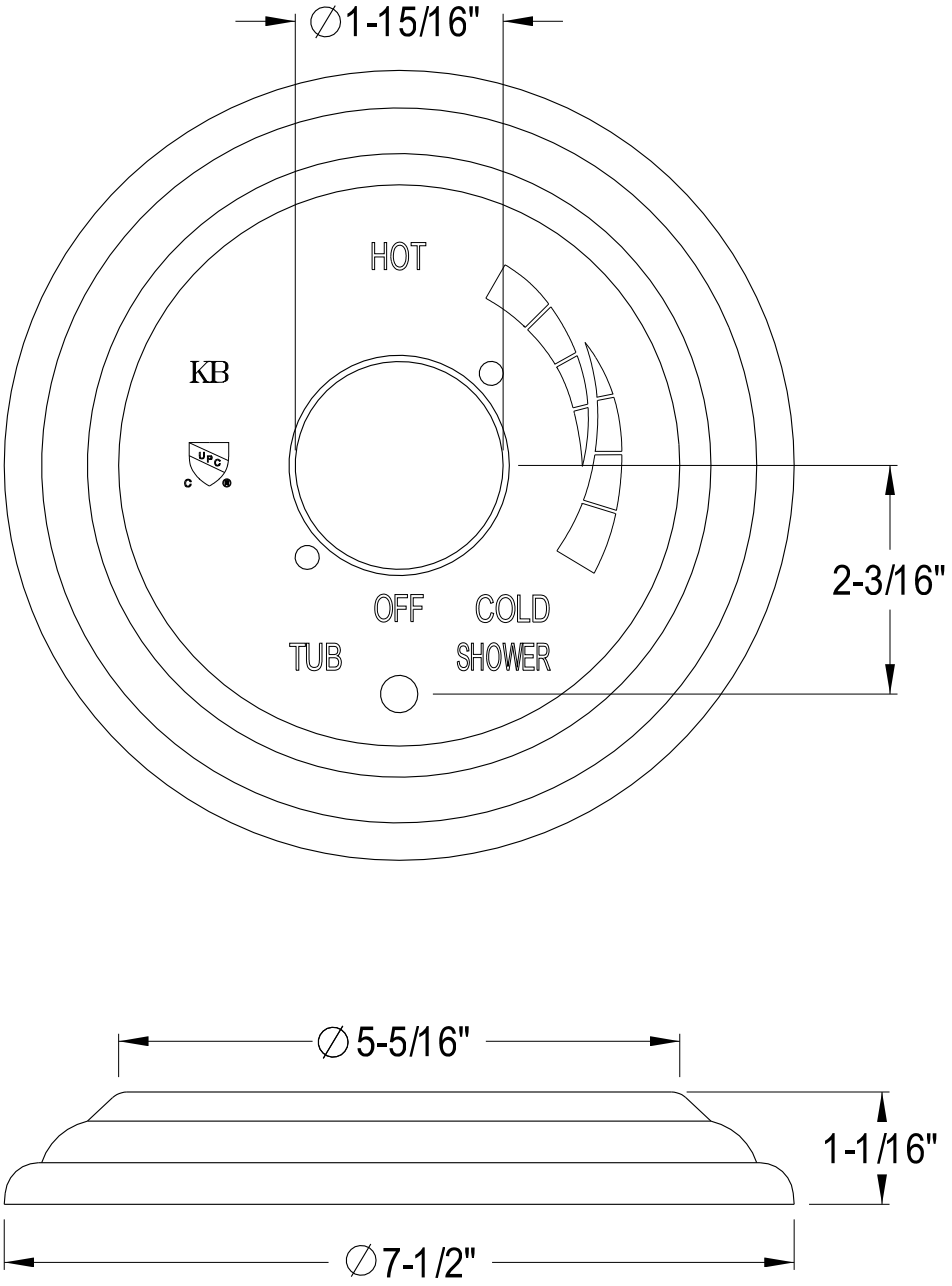
Escutcheon (Plate)