KBH8960,1,2,3,5,6,7,8EFLH,EFLACH
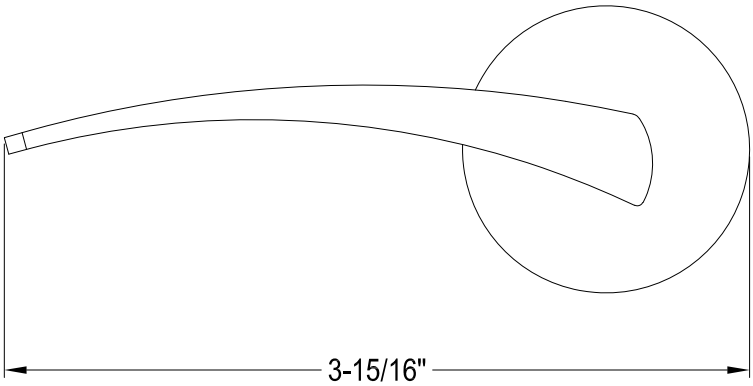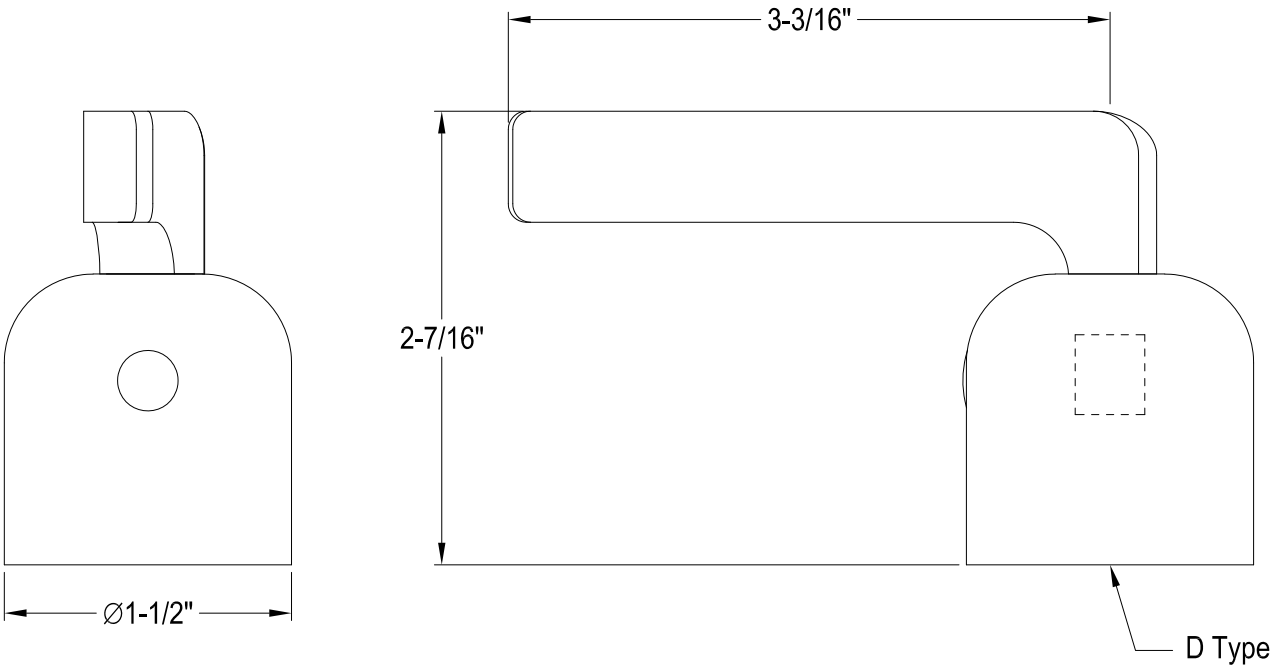
Lever Handle, Hot