KS2951,8DX
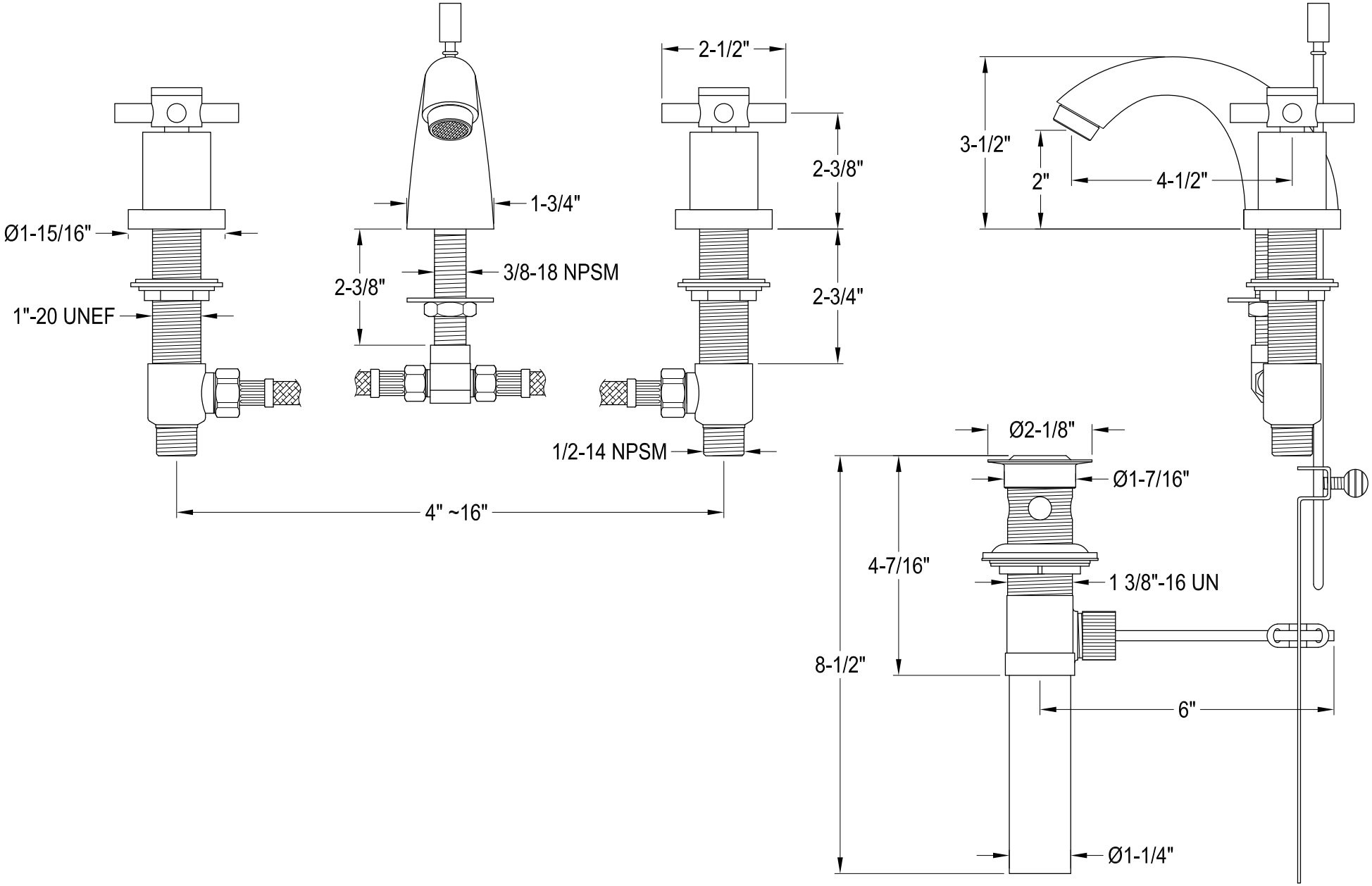
Mini Widespread Lavatory Faucet with Brass Pop-Up