KS36300,10,20,30,50,70,80AL
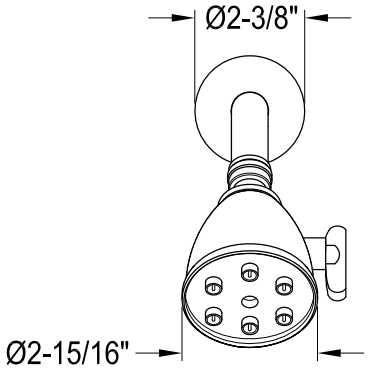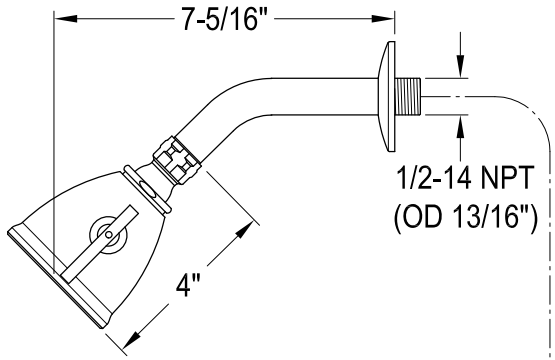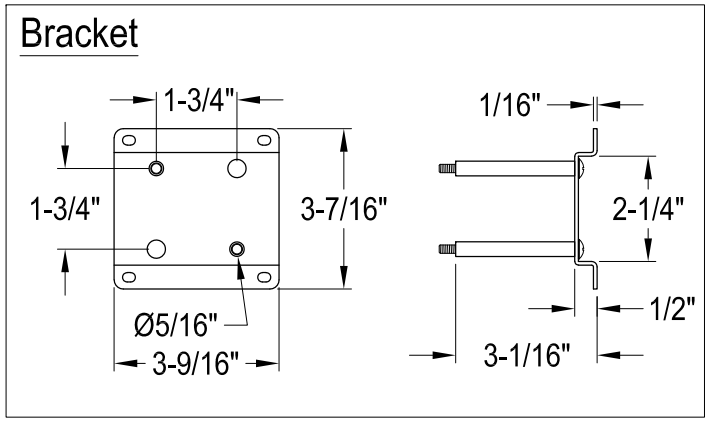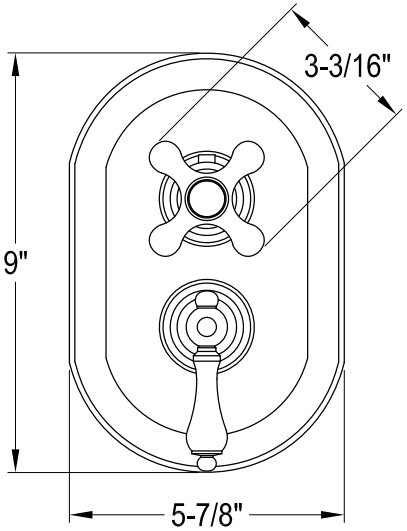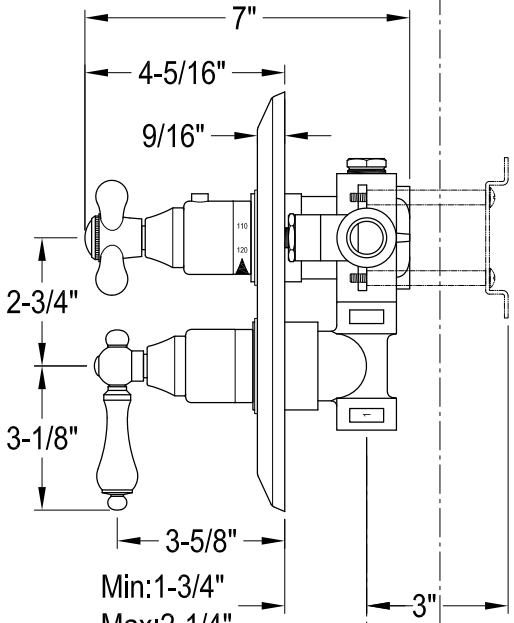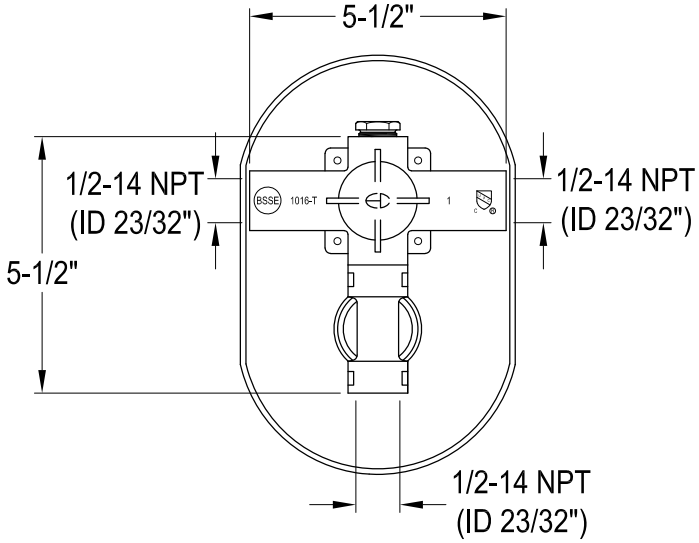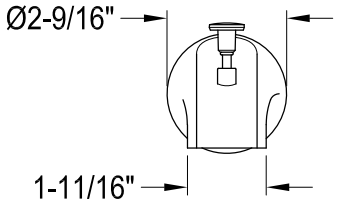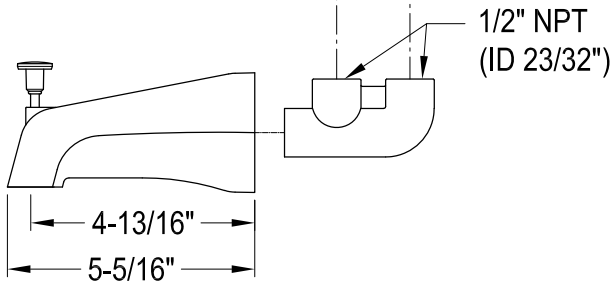
Thermostatic Mixer Valve Tub & Shower Faucet