KS4040,1,2,5,8ZL
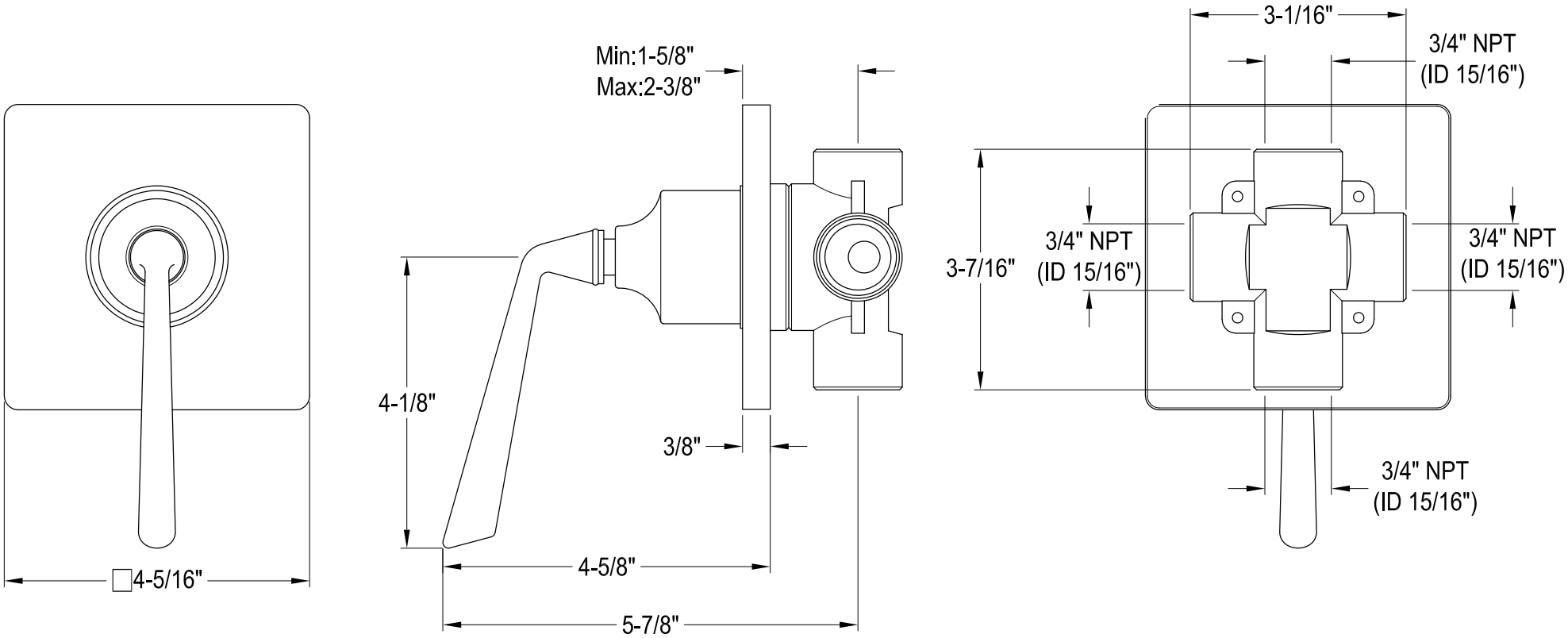
Six-Way Diverter Valve with Single Handle & Square Plate