KS4100,1,2,3,5,6,7,8CKL
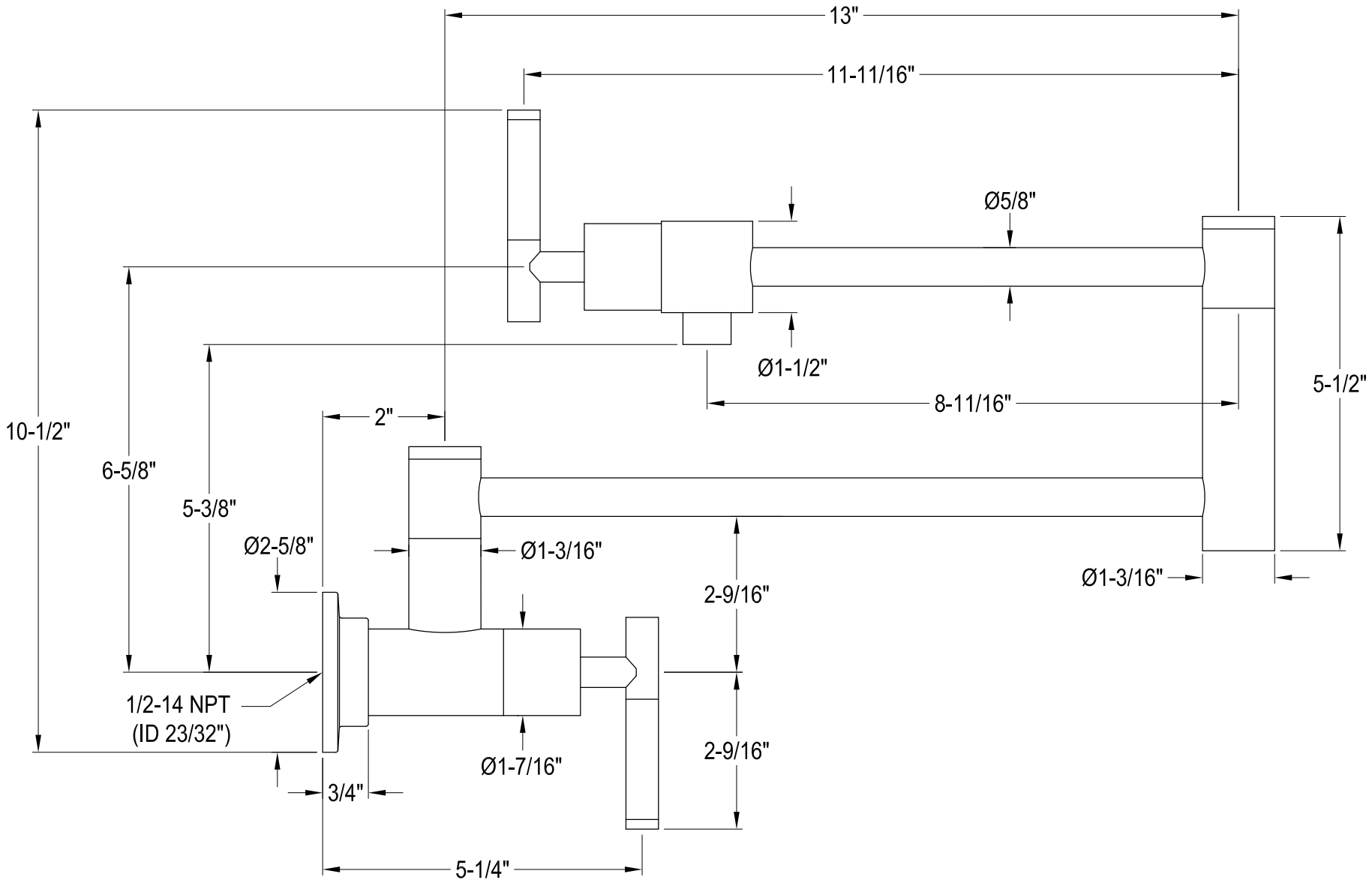
Twin Handles Wall Mount Pot Filler