KS6040,1,7,8DKL
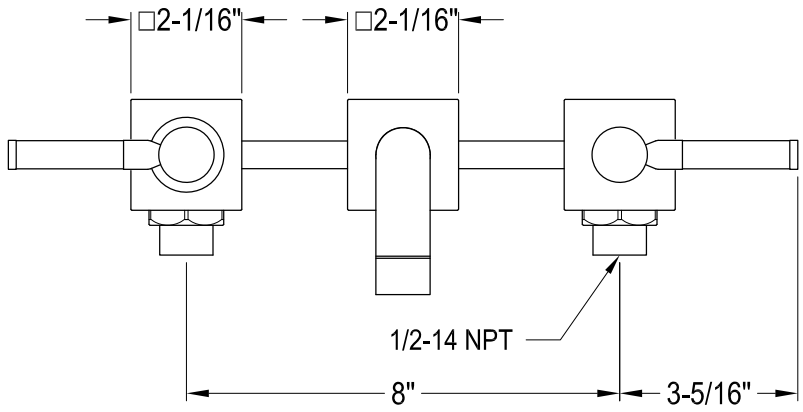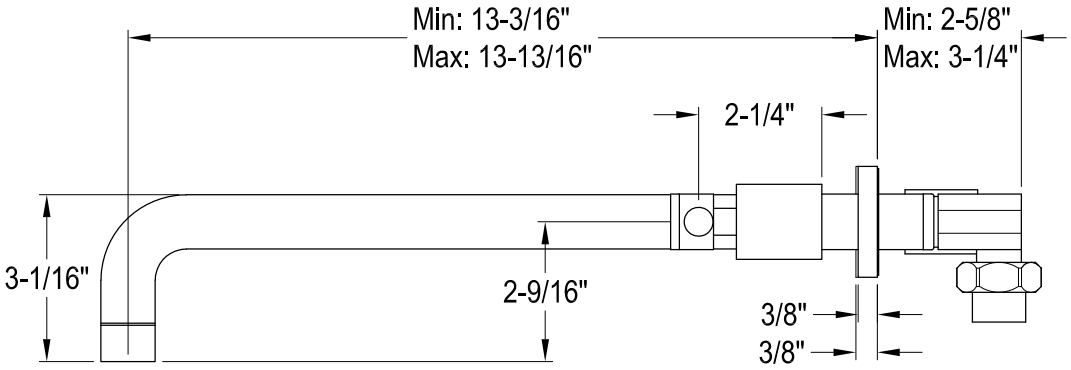
Twin Handles Wall Mount Tub Filler