KS6050,1,7,8DKL
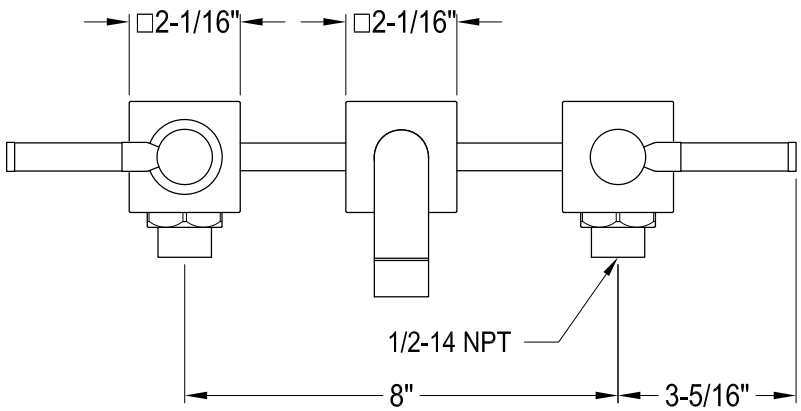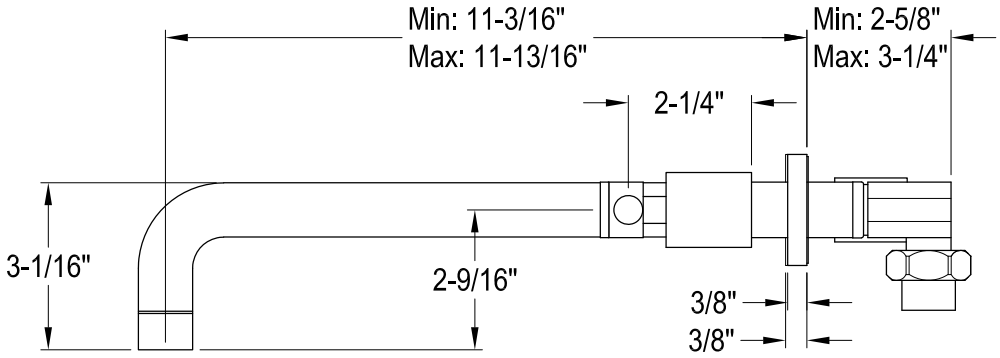
Twin Handles Wall Mount Tub Filler