KS7020,1,2,3,6,7,8BEX
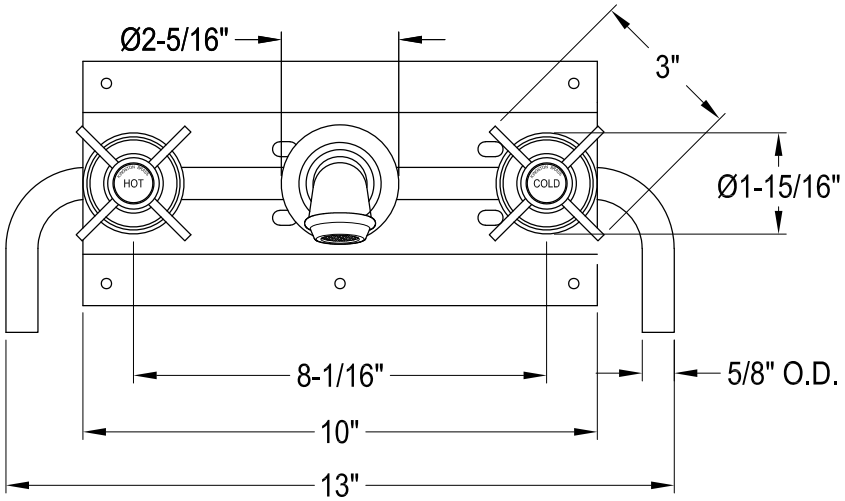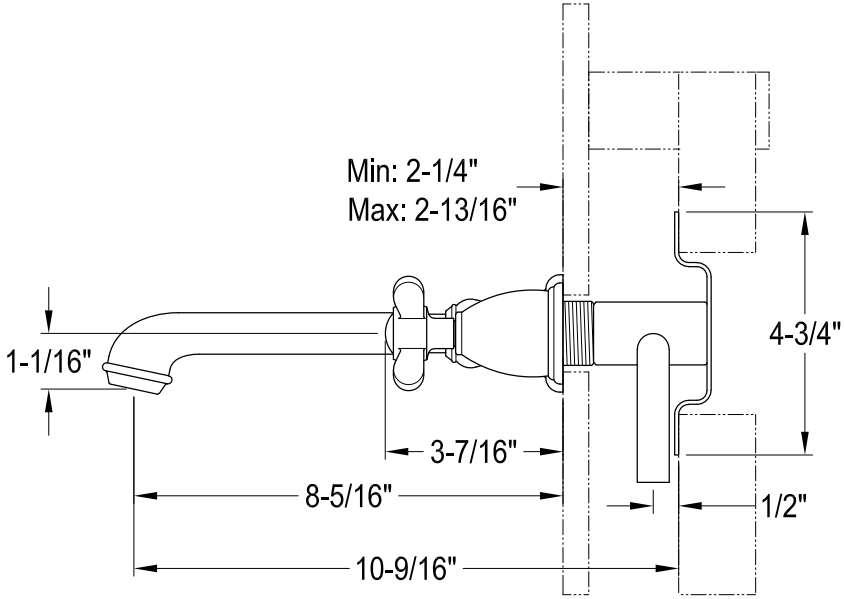
Twin Handles Wall Mount Tub Filler