KS7121,2,5,8KWL
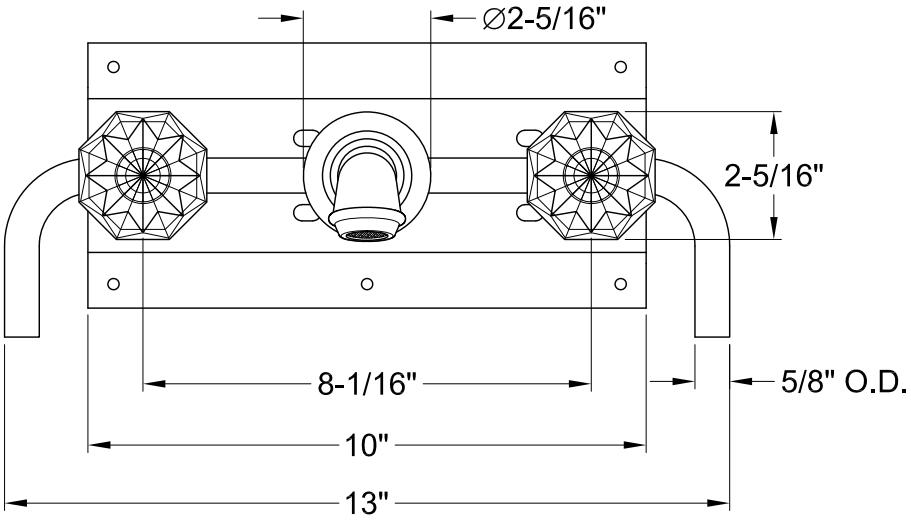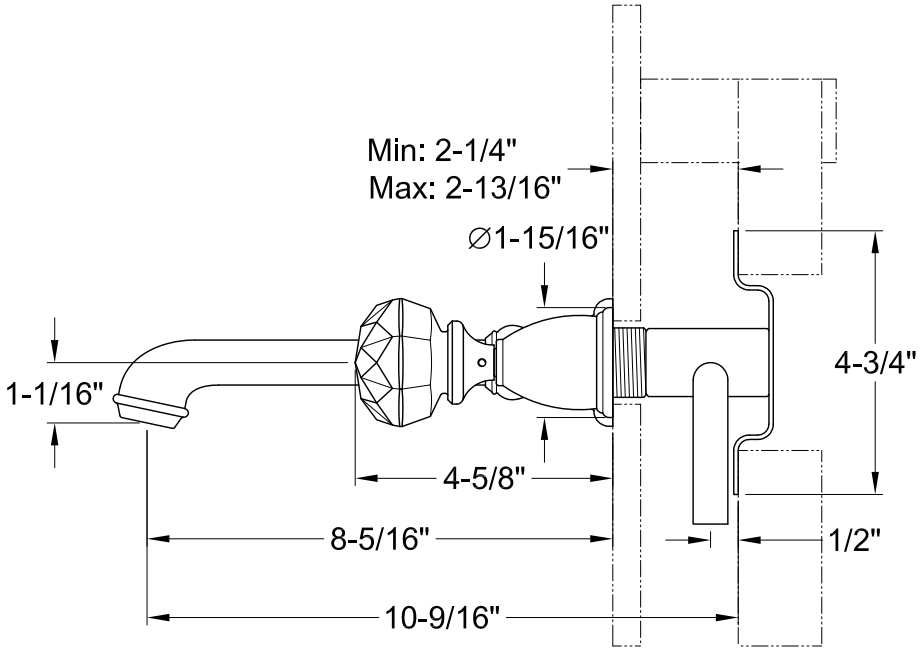
Twin Handles Wall Mount Bathroom Faucet