KS8040,1,7,8RX
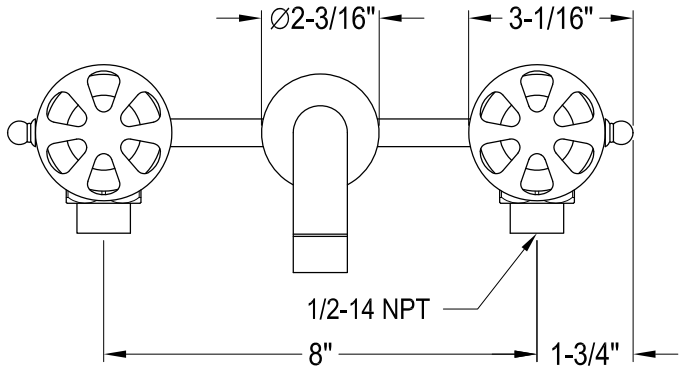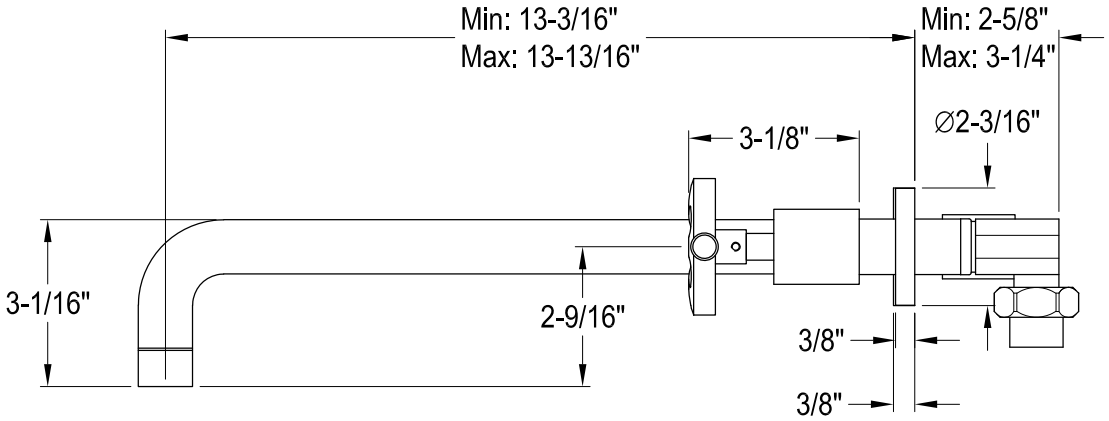
Twin Handles Wall Mount Tub Filler