KS8050,1,7,8DX
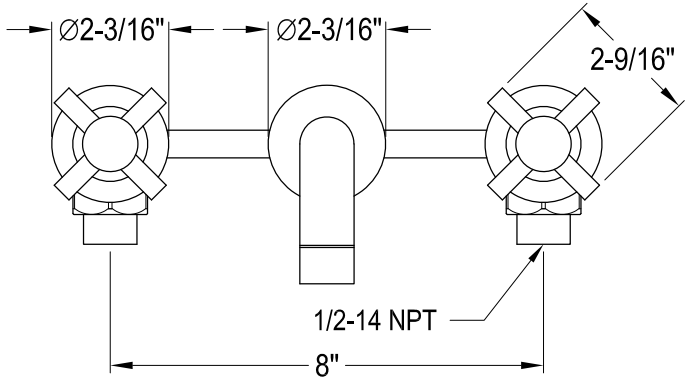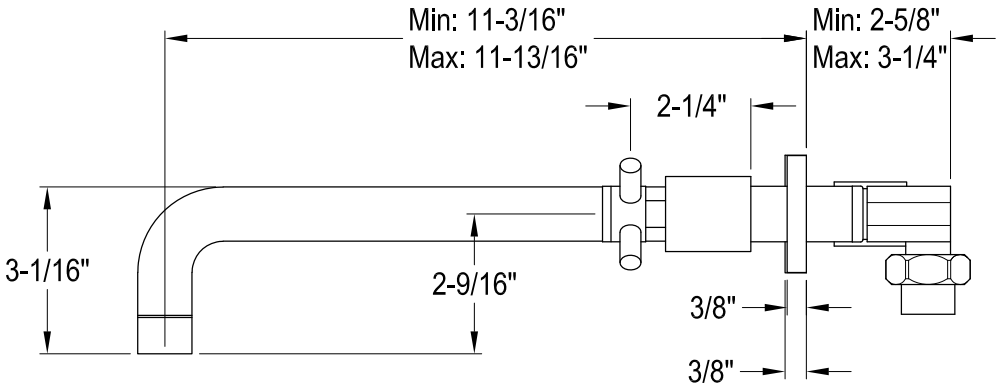
Twin Handles Wall Mount Tub Filler