KS8100,1,2,3,5,6,7,8RKX
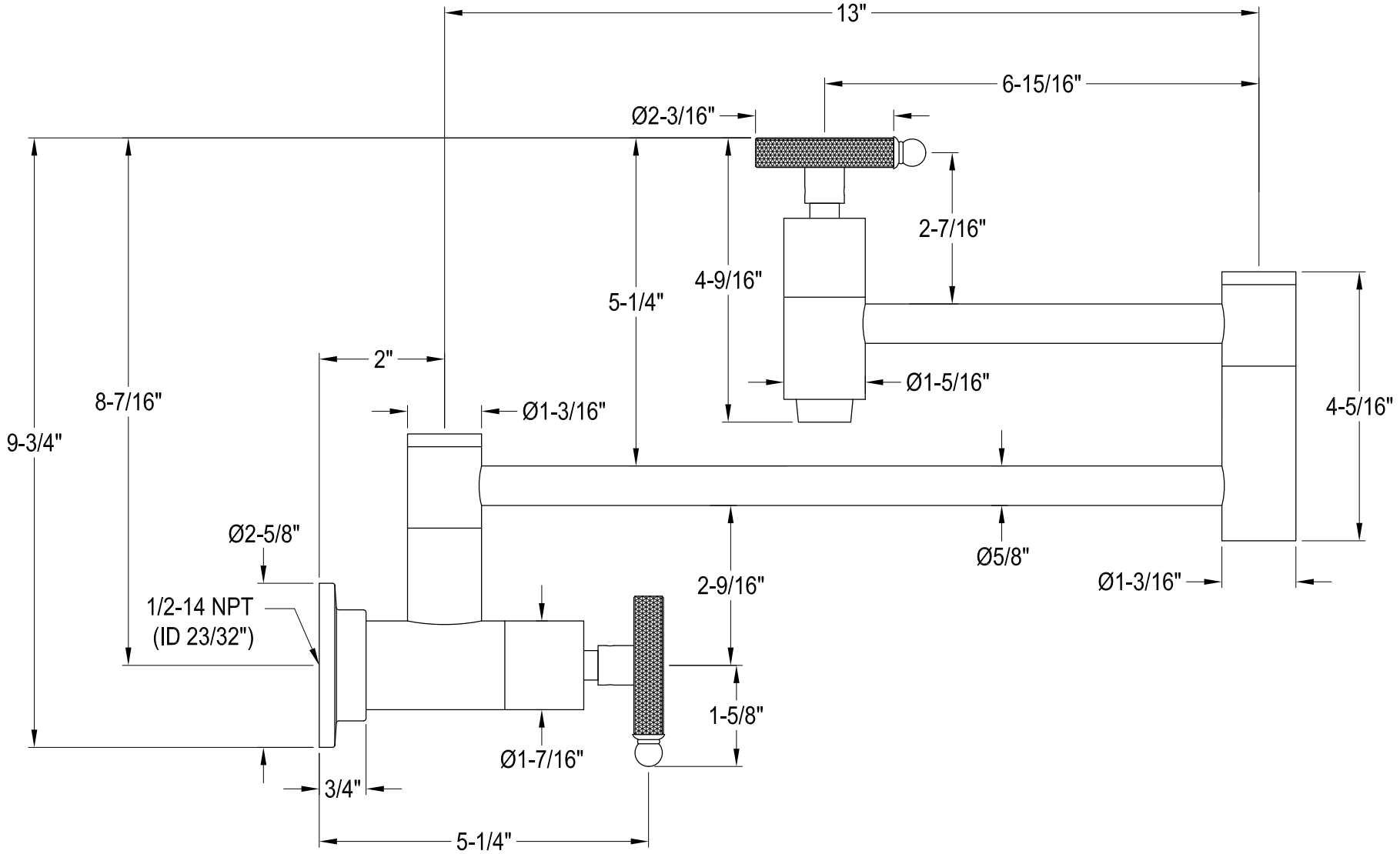
Twin Handles Wall Mount Pot Filler