KS8431,5,8DL

Single Handle 4" Centerset Lavatory Faucet With Push-Up Pop-Up

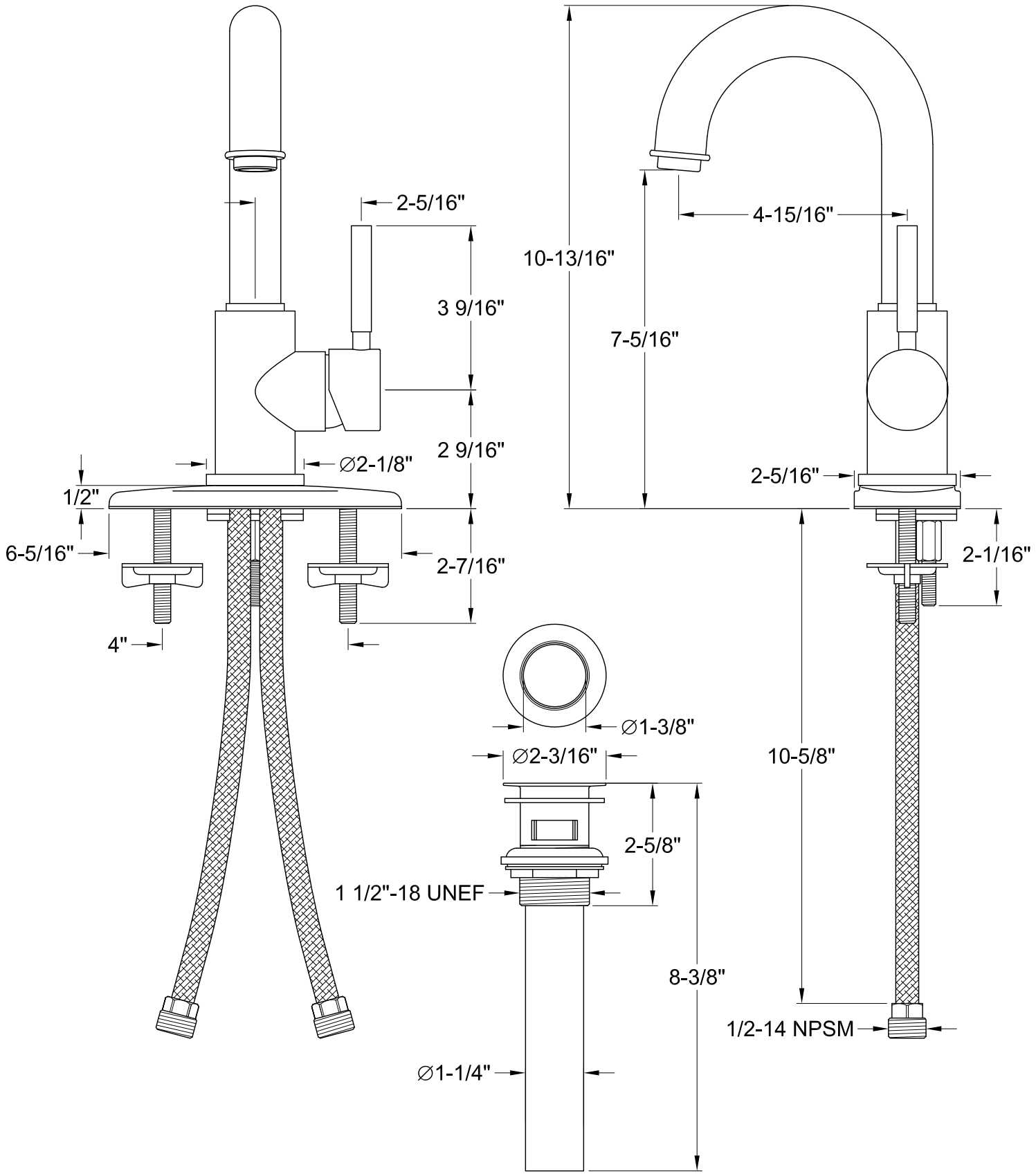

Ref# KS8431,5,8DL | 2018-12-A