KSH2960,1,2,3,5,6,7,8RKX,RKXVN,RKXNB
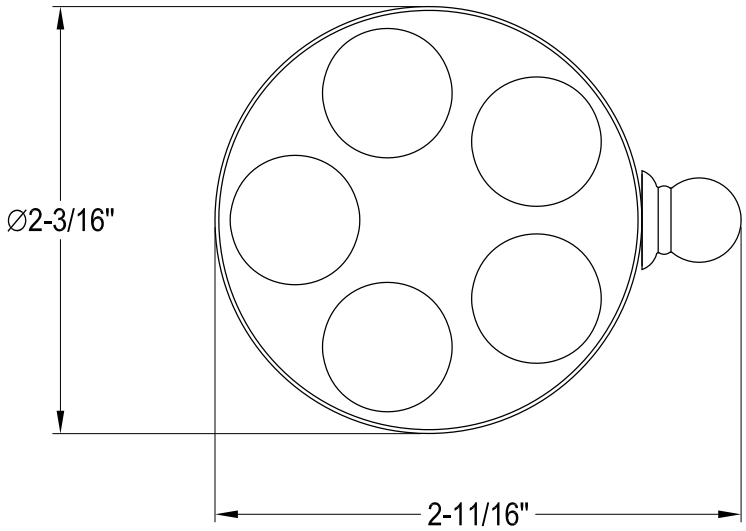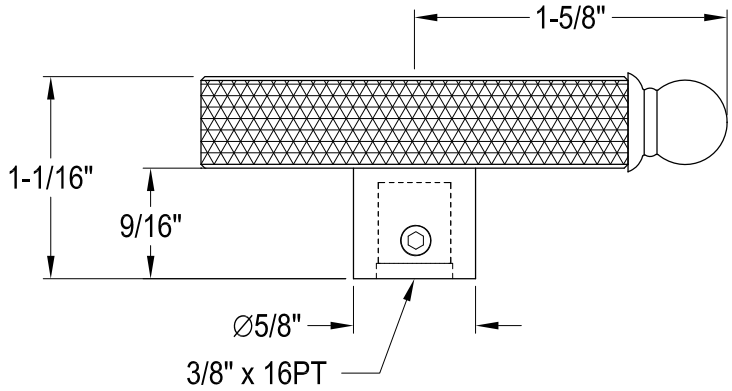
Wheel Handle