KSH313,MB,PB,AB,ORB,AC,PN,SB,SNH
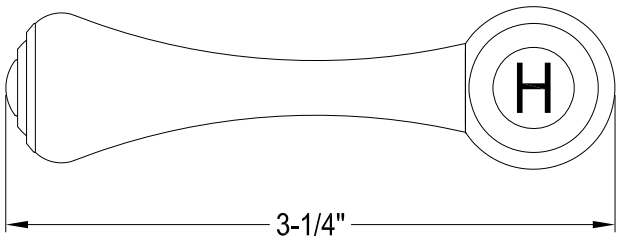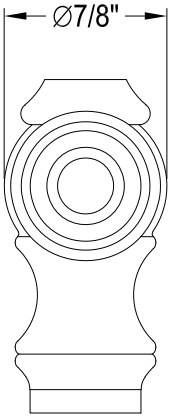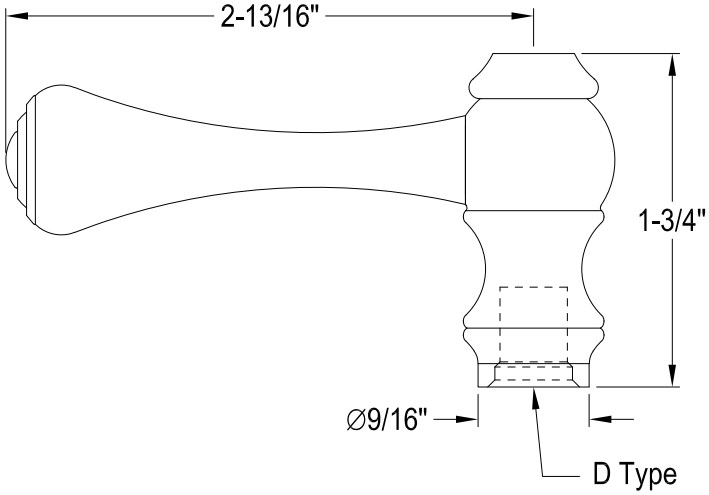
Lever Handle, Hot