# KSH3220,1,2,3,5,6,7,8PLC,PLACC
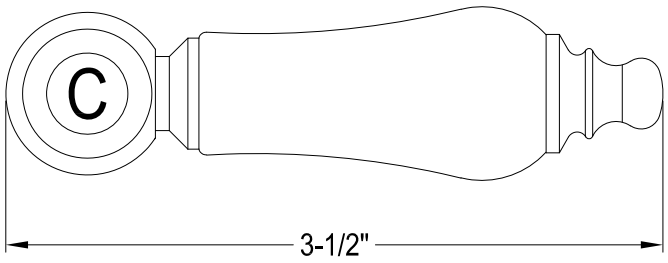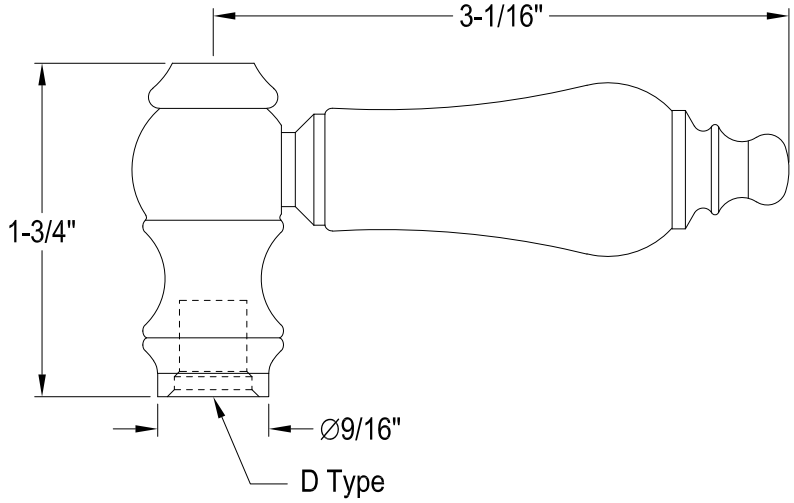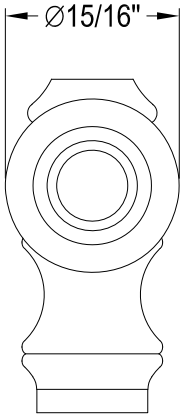
Lever Handle, Cold