KSH3600,1,2,5,6,7,8PXH
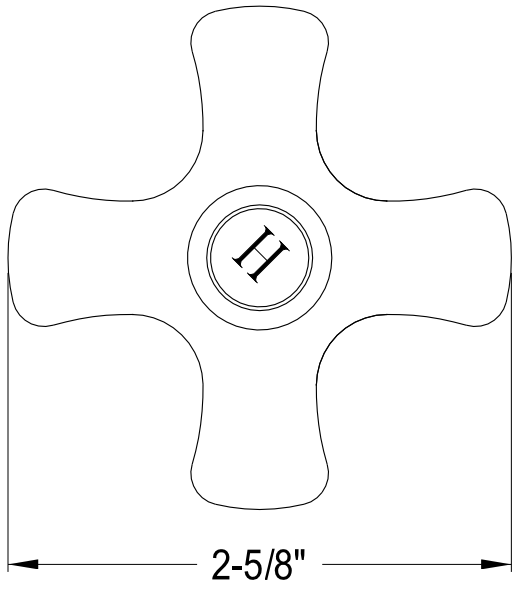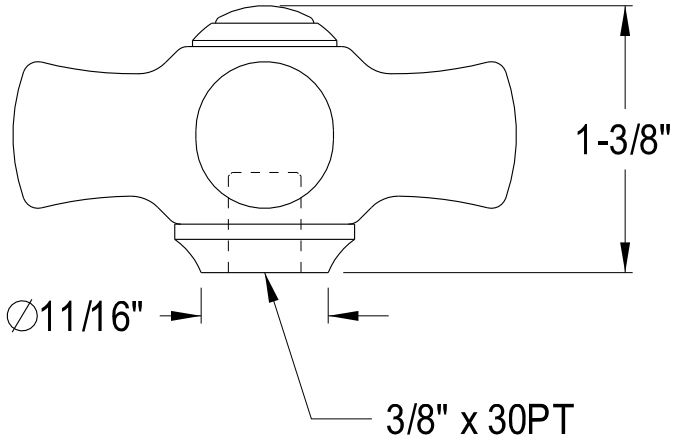
Cross Handle, Hot