KSH4460,1,2,3,4,5,6,7,8,9BXH
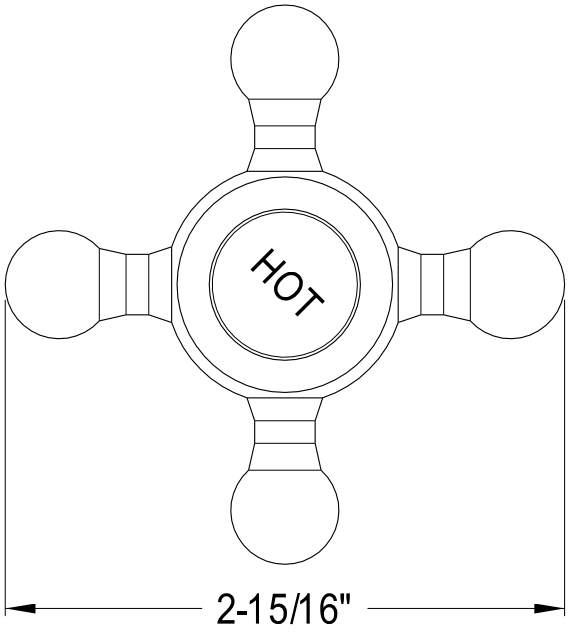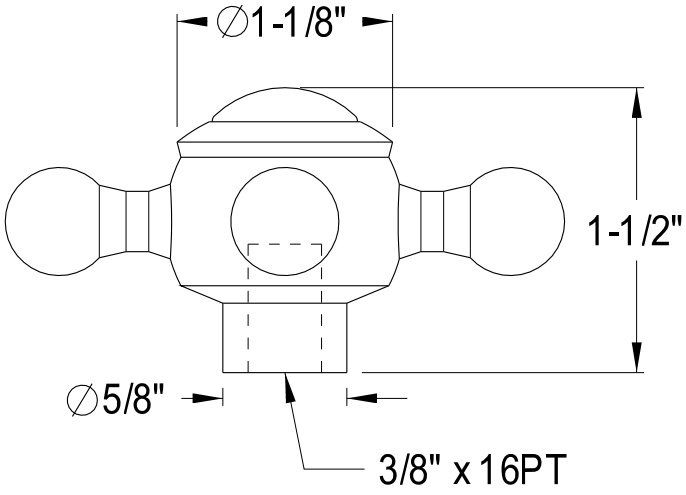
Cross Handle, Hot