KSH4461,2,5,8WQL
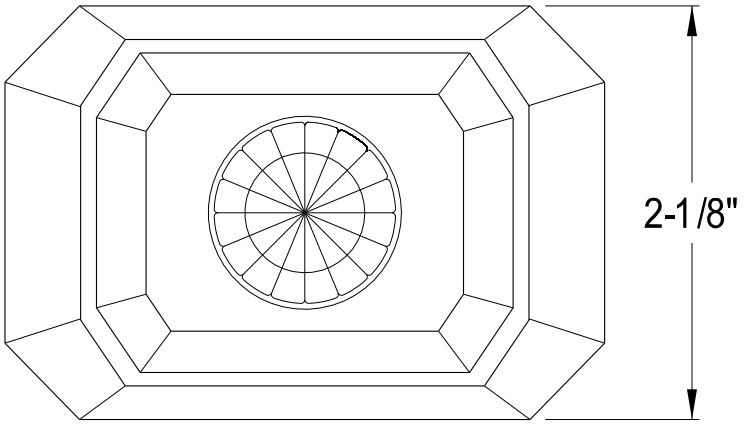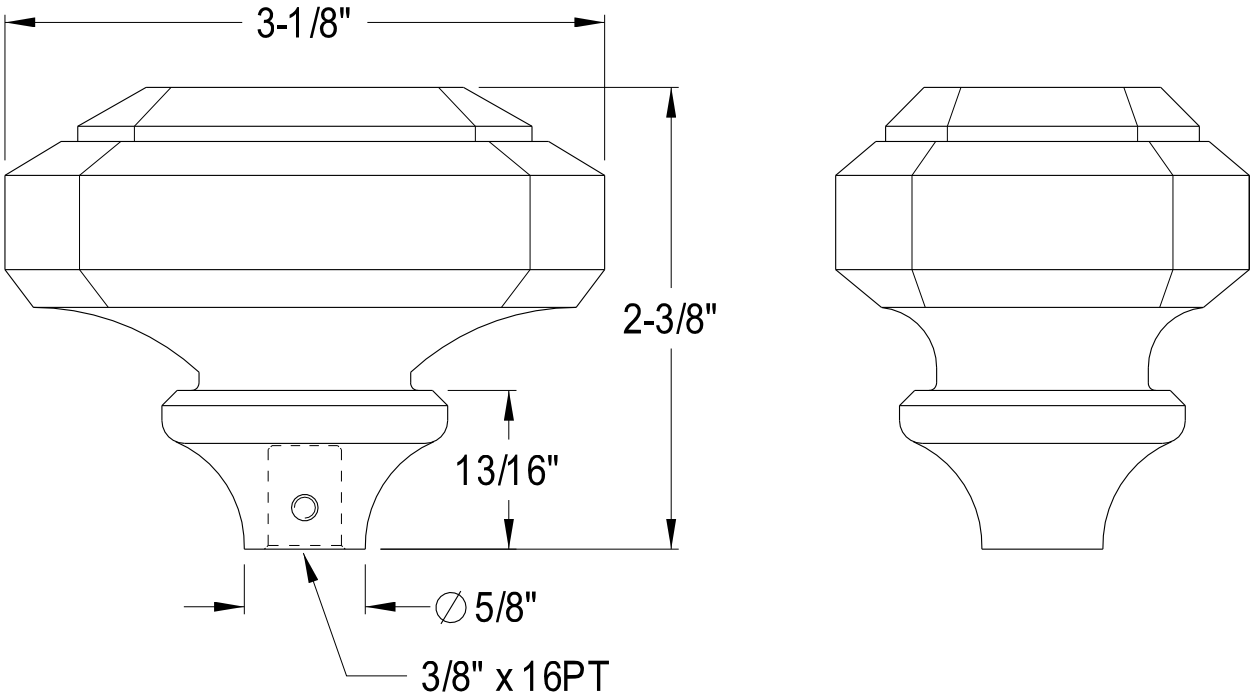
Crystal Rectangular Handle