KSHI313,MB,PB,AB,ORB,AC,PN,SB,SNH
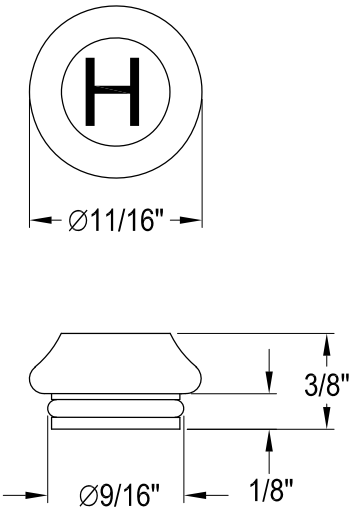
Handle Index, Hot