KTAL30,1,2,3,5,6,7,8
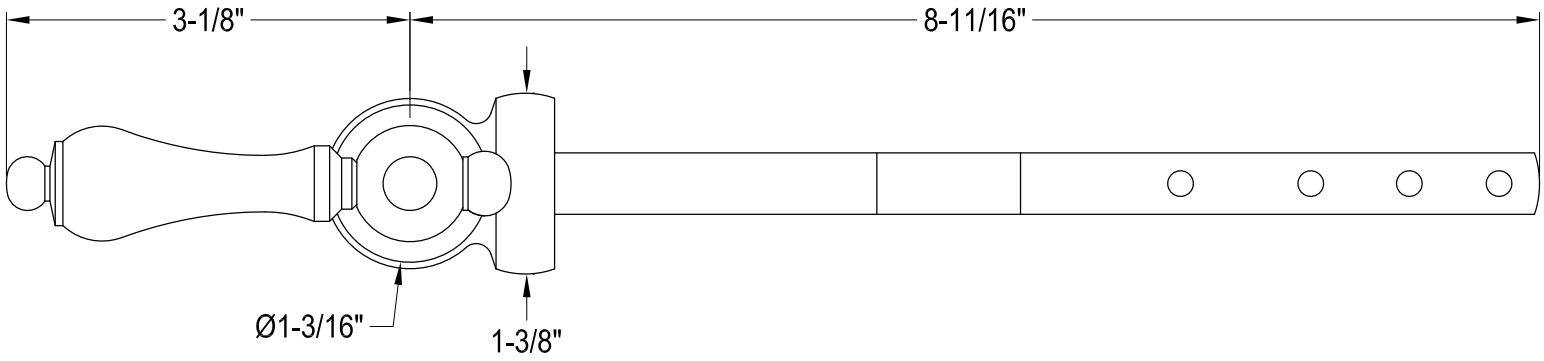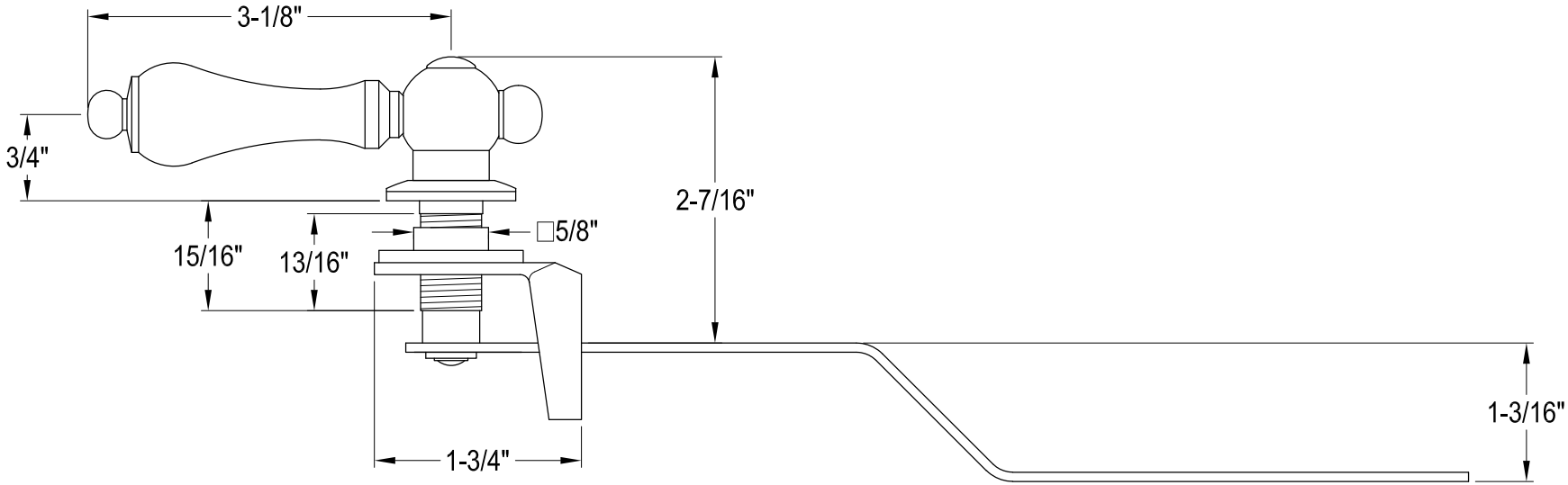
Tank Lever