KVPB3122710,1,6,7

31" Console Sink With Stainless Steel Legs

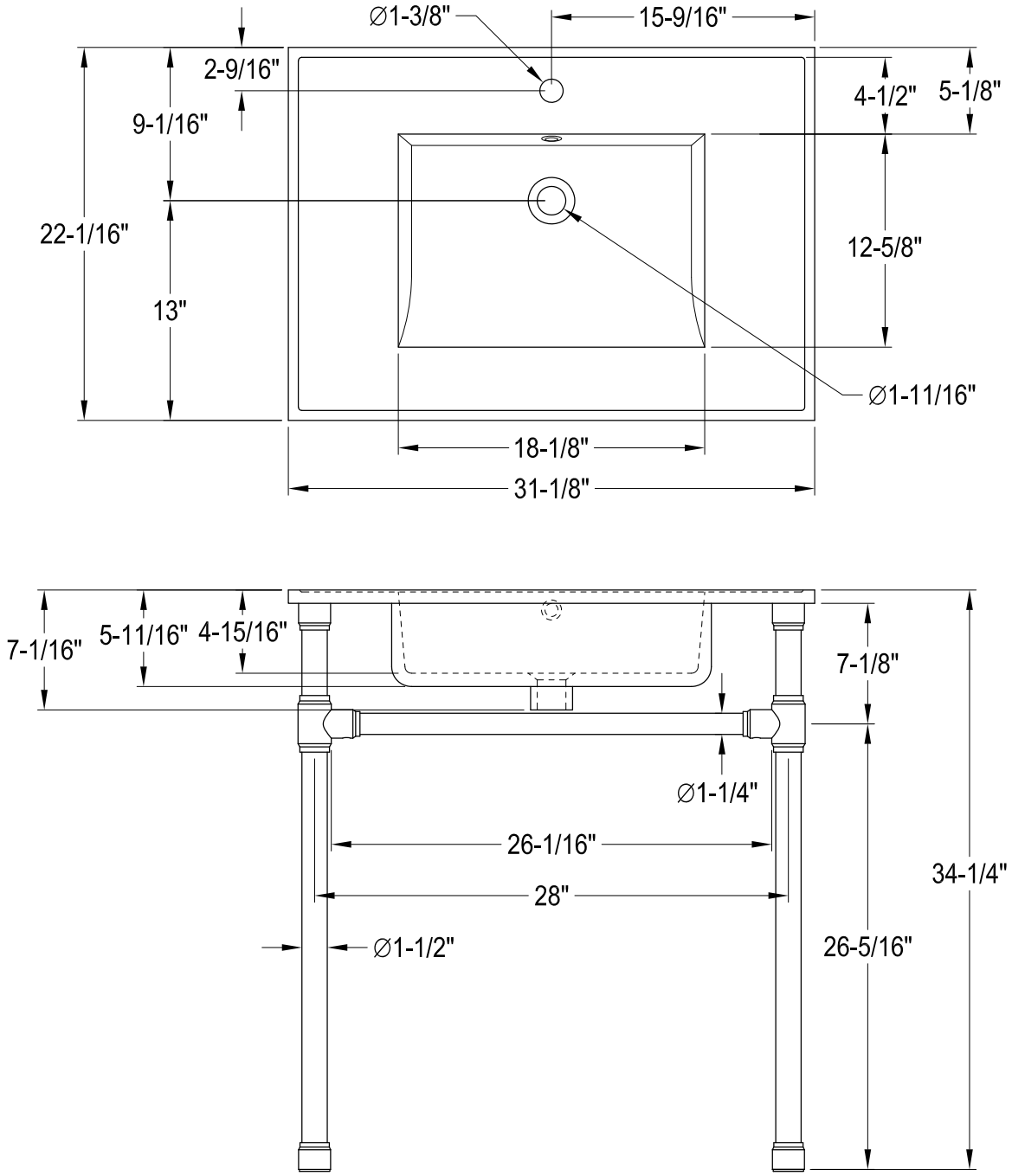

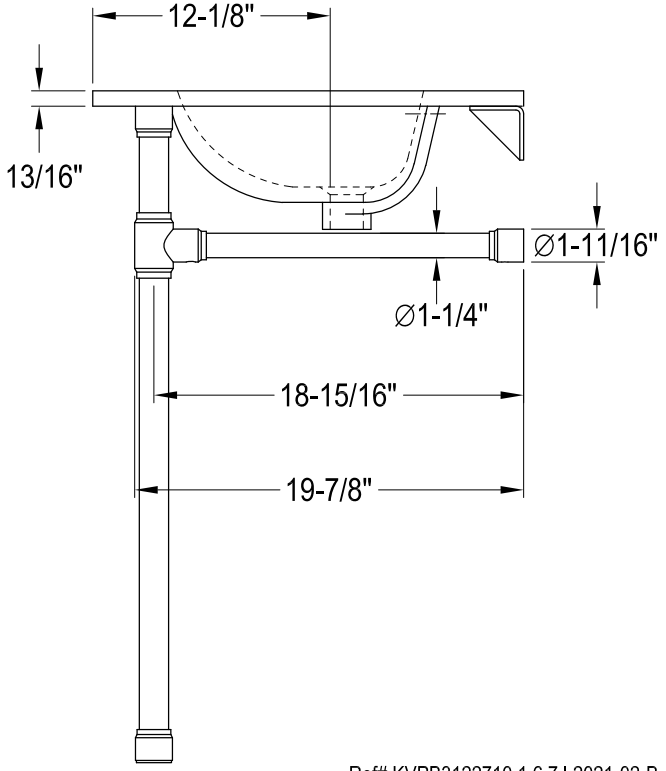

Ref# KVPB3122710,1,6,7 | 2021-02-B