KX4641,8CK
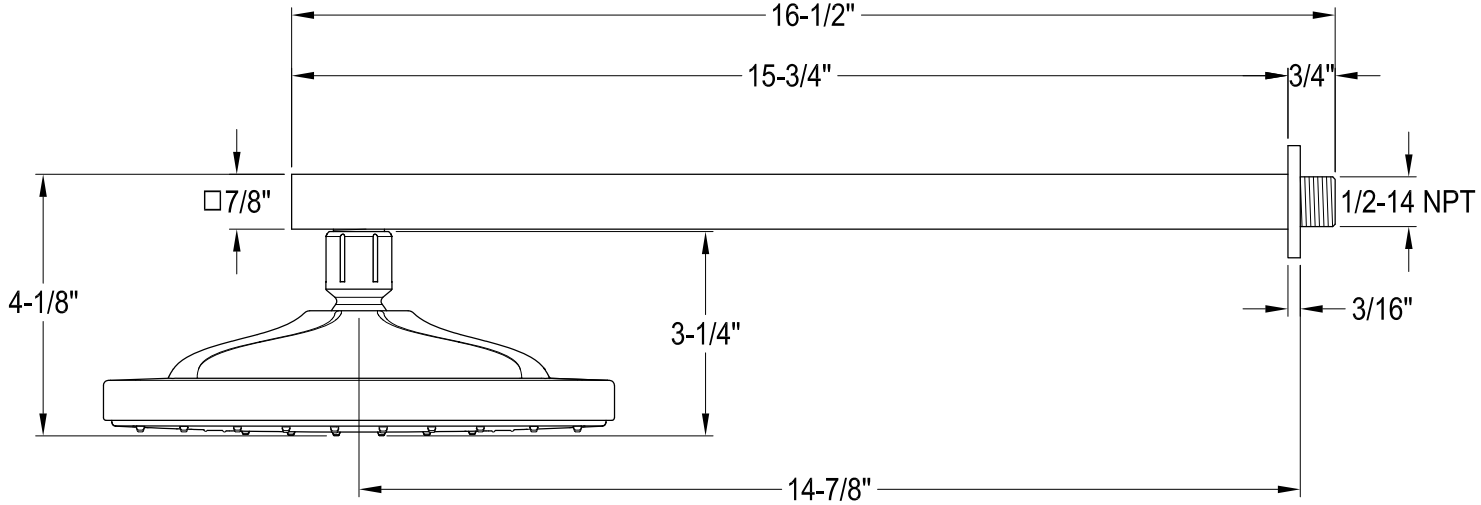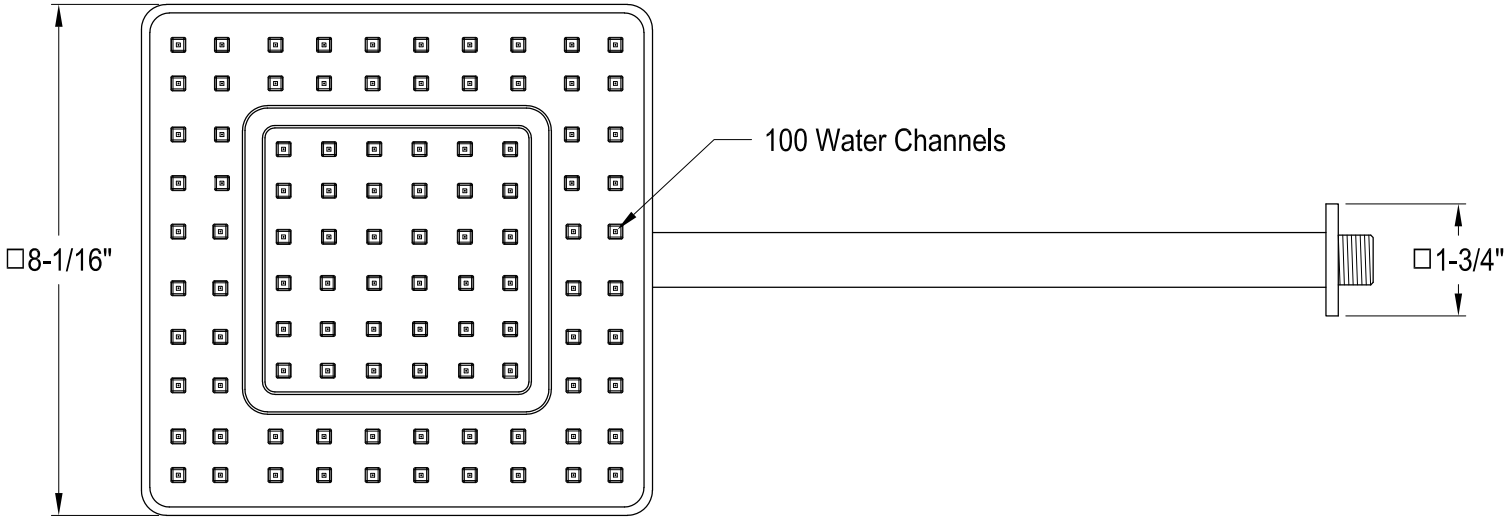
8" Square Rain Shower With Shower Arm