VT7DE512823

51" Acrylic Freestanding Tub with 7" Faucet Drillings & Drain

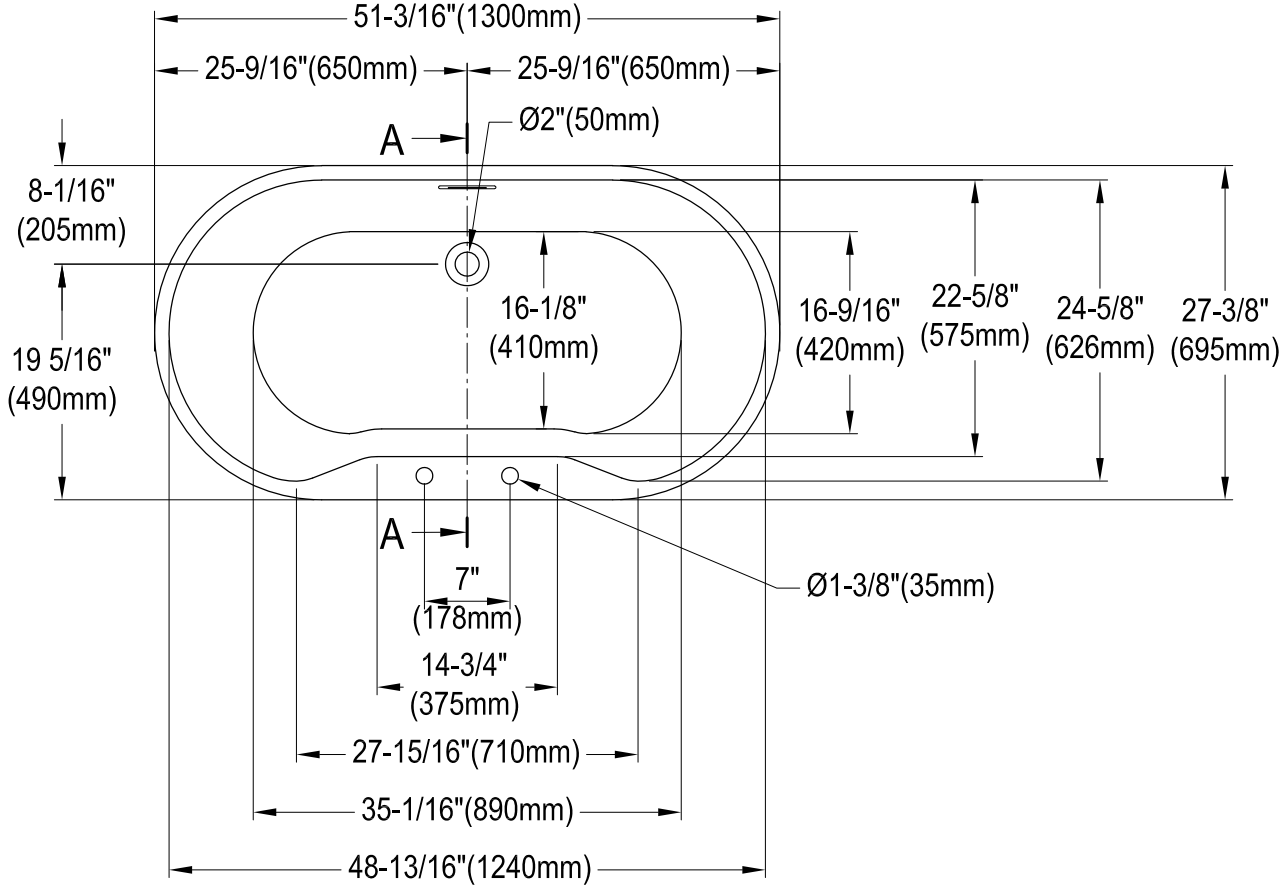

M14 x 100 (4 pcs)

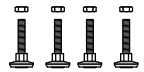

Drain Hole Size

Scale(3:1)

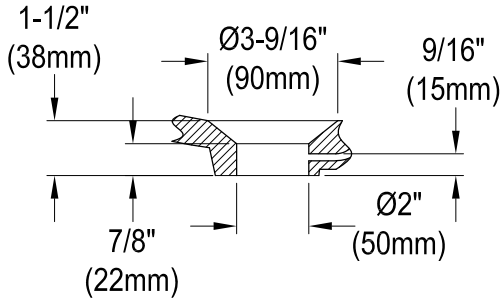

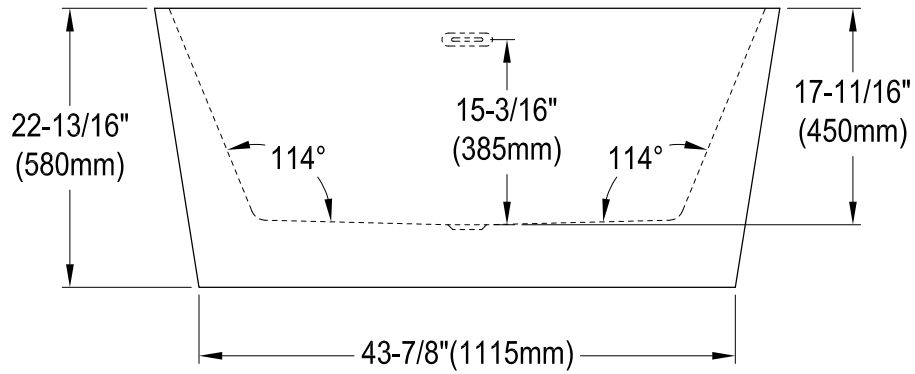

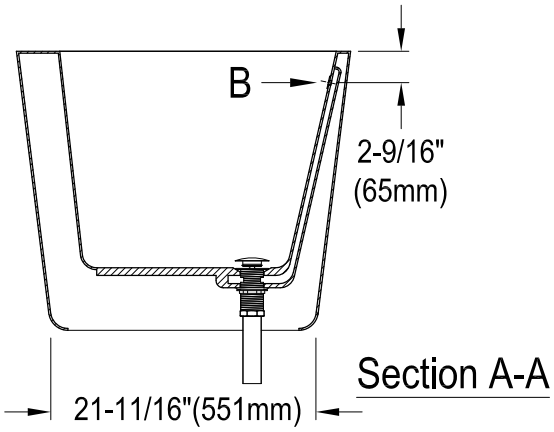

Section A-A

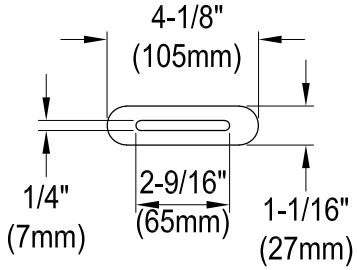

View B

Scale(3:1)