VTAP603022R
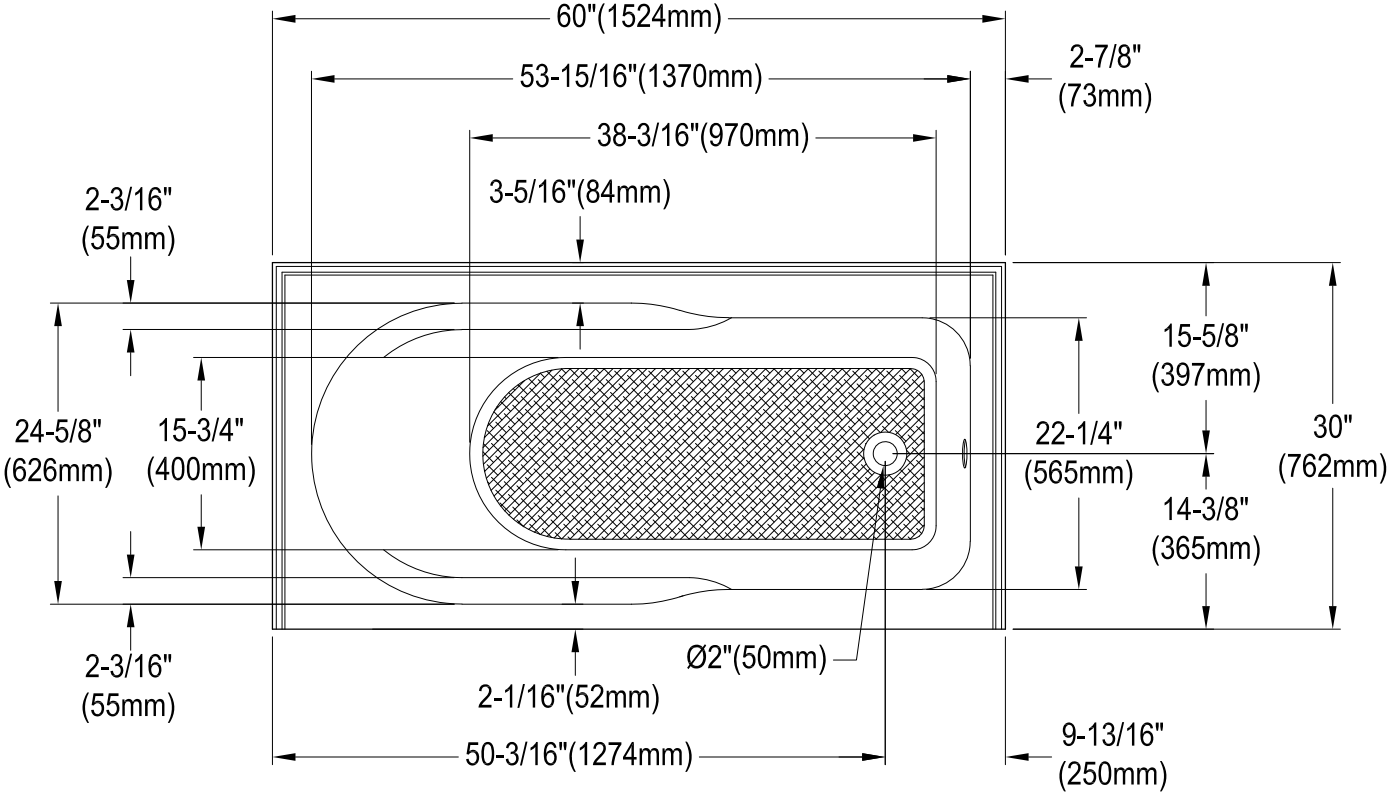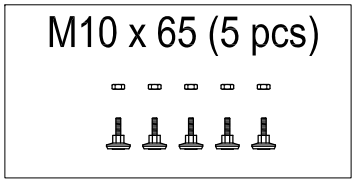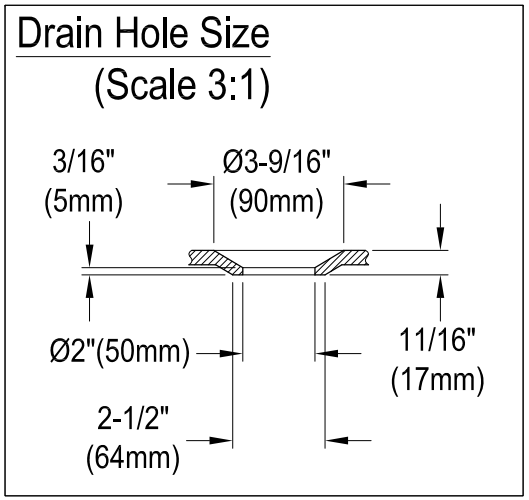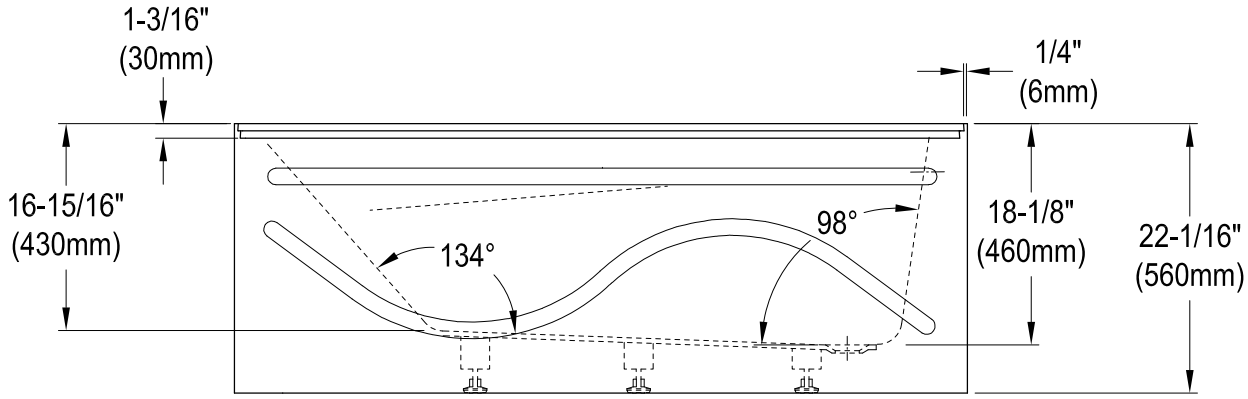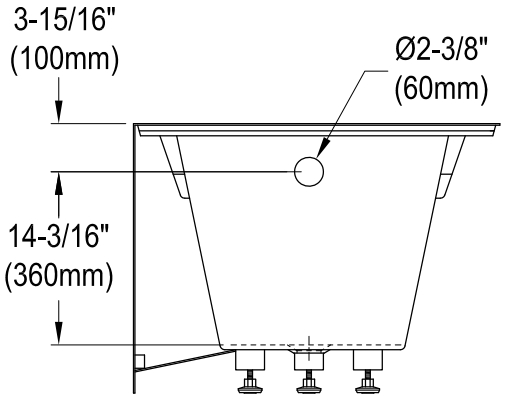
60" Acrylic Anti-Skid Alcove Tub with Right Hand Drain Hole