Z18KBSA1790,1,2,3,5,6,6NB,7,8
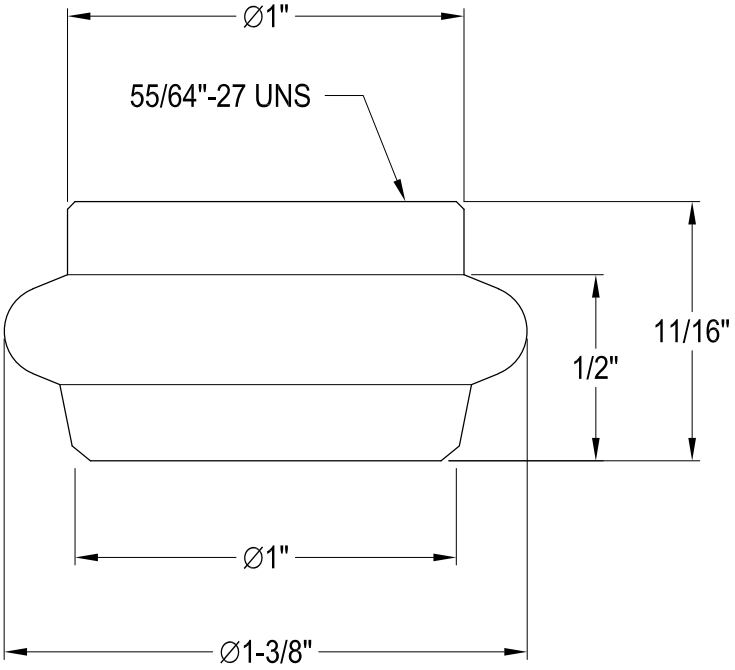
Aerator